Cherry Bed • Children's Bookcase • Mantel Clock • Wood Pens • Routing Through Mortises

Woodsmith®

Vol. 18 / No. 108

WhereWeShare.com

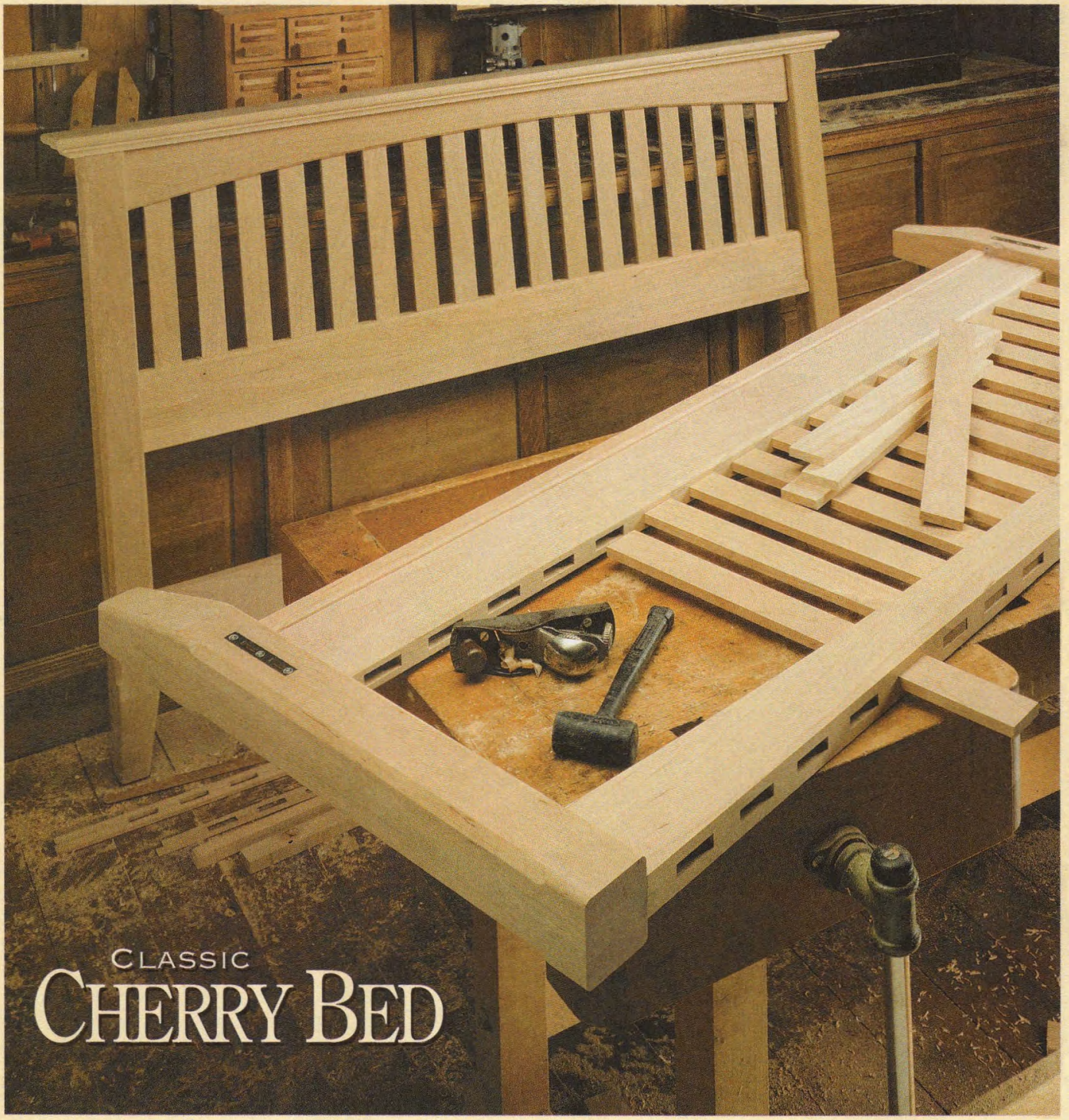

CLASSIC
CHERRY BED

Woodsmith

No. 108 December, 1996

Publisher Donald B. Peschke
Editor Terry J. Strohman
Associate Editor Jon Garbison
Assistant Editor Vincent Ancona
Art Director Todd Lambirth
Senior Illustrators David Kreyling, Dirk Ver Steeg
Graphic Designer Mike Mittermeier

CREATIVE RESOURCES

Creative Director: Ted Kralicek • *Project Developer:* Ken Munkel • *Project Designer:* Ted Wong, Jr. • *Shop Manager:* Steve Curtis • *Shop Craftsman:* Steve Johnson • *Photography Director:* Lark Gilmer • *Senior Photographer:* Crayola England

BOOKS

Executive Editor: Douglas L. Hicks • *Art Director:* Linda Vermie • *Senior Graphic Designer:* Chris Glowacki

CIRCULATION

Circulation Director: Susan Du Bois • *Direct Mail Manager:* Glenda K. Battles • *Subscription Manager:* Sandy Baum • *Renewal Manager:* Paige Rogers • *Assistant Direct Mail Mgr.:* Julie Greenlee • *Assistant Subscription Mgr.:* Joy Krause • *Associate Graphic Design Director:* Susie Rider • *Sr. Graphic Designer:* Cheryl L. Simpson

CORPORATE SERVICES

Vice President of Planning and Finance: Jon Macarthy • *Controller:* Robin Hutchinson • *Sr. Account.:* Laura Thomas • *Accts. Payable:* Mary J. Schultz • *Production Dir.:* George Chmielarz • *Production Assistant:* Susan Dickman • *Electronic Pub:* Douglas M. Lidster • *Production Artist:* Jon Snyder • *Prepress Image Spec.:* Troy A. Clark • *Electronic Communications Coord.:* Gordon C. Gaippe • *Network Administator:* Al Barnes • *Prof. Development Dir.:* Joyce Moore • *H.R. Assistant:* Kirsten Koele • *Admin. Assistant:* Julia Fish • *Receptionists:* Jeanne Johnson, Sheryl Ribbey • *Building Maint.:* Ken Griffith

WOODSMITH MAIL ORDER

Operations Director: Bob Baker • *Art Dir.:* Cindy Scarpino • *Materials Manager:* Mark Mattiussi • *Customer Service Mgr.:* Jennie Enos • *Nat. Sales Manager:* Kent A. Buckton • *Warehouse Supr.:* Nancy Johnson • *Buyer:* Linda Jones • *Operation Assistant:* Tammy Aldini • *Team Leader:* Karla Eslinger • *Promotion Copywriter:* Dave Stone • *Cust. Serv. Reps.:* Jennifer Murphy, Anna Cox, Kristi Andrews, Margo Petrus • *Warehouse:* Chuck Carlson, Sylvia Carey, Larry Prine, Scott Gilliam, Thomas J. Russell

WOODSMITH STORE

Manager: Dave Larson • *Assistant Manager:* Paul Schneider • *Sales Staff:* Pat Lowry, Jerome Herr, Wendell Stone • *Office Manager:* Vicki Edwards

Woodsmith® (ISSN 0164-4114) is published bimonthly (Feb., Apr., June, Aug., Oct., Dec.) by August Home Publishing Company, 2200 Grand, Des Moines, IA 50312.
Woodsmith® is a registered trademark of August Home Publishing.

Copyright© 1996 August Home Publishing Company. All rights reserved.

Subscriptions: Single copy: $4.99. One year subscription (6 issues), $24.95. (Canada/Foreign add $5 per year, U.S. funds.)
Periodicals Postage Paid at Des Moines, IA and at additional offices.
Postmaster: Send change of address to *Woodsmith*, Box 37112, Boone, IA 50037-2112.
Subscription Questions? Write to *Woodsmith*, P.O. Box 842, Des Moines IA 50304-9961 or call 1-800-333-5075, 8:00 am to 5:00 pm, Central Time, weekdays.
E-Mail: augusthome@aol.com
World Wide Web: http://www.augusthome.com

EDITOR'S COLUMN

SAWDUST

I think we've really covered a full range of projects in this issue. From the queen-size cherry bed (featured on page 6) to small, wood pens turned on a drill press (page 24). And in between, we managed to fit a children's bookcase (page 20) and a mantel clock (page 28).

Besides all the excitement of designing and building the projects in this issue, there's something else I'm excited about — a book.

NEW BOOK

Over the years, some of our most popular projects have been bookcases and shelves. It seems just about everyone can use another shelf or a place for books in their home.

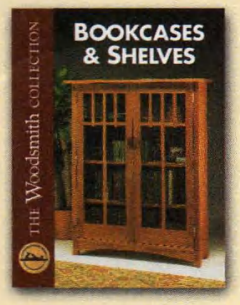

So about a year ago we decided to put together a book of some of the best bookcase and shelf plans ever featured in *Woodsmith*. That's when the fun began. There was a lot of lively discussion around here on which plans were the "best." (It seems as though everyone had a favorite.)

In the end we came up with 12 projects, and I think there's something for everyone. Simple wall shelves. Weekend projects. Country projects. Even our popular Craftsman and Classic Bookcases.

And of course, it wouldn't be *Woodsmith* without some techniques such as how to cut dovetails on a band saw or design shelves that won't sag when filled with books.

We've named the book *Bookcases and Shelves* (catchy title, huh?). It will be ready for delivery by the holiday season. If you're a *Woodsmith* subscriber, you can get a special early discount price of $17.95. To order, call 1-800-444-7002.

Terry

STATEMENT OF OWNERSHIP, MANAGEMENT AND CIRCULATION
(Required by 39 U.S.C. 3685)

Publication Title: Woodsmith. 2. Publication No.: 0164—4114. 3. Filing Date: October 9, 1996. 4. Issue Frequency: Bimonthly. 5. No. of issues published annually: 6 (six). 6. Annual subscription price: $19.95. 7. Complete mailing address of known office of publication: 2200 Grand Avenue, Des Moines, (Polk County), Iowa 50312-5306. 8. Complete mailing address of the headquarters or general business office of the publisher: 2200 Grand Avenue, Des Moines, Iowa 50312-5306. 9. Full names and complete mailing address of publisher, editor, and managing editor: Publisher: Donald B. Peschke, 2200 Grand Avenue, Des Moines, Iowa 50312; Editor: Terry J. Strohman, 2200 Grand Avenue, Des Moines, Iowa 50312. 10. Owner: August Home Publishing Co., 2200 Grand Avenue, Des Moines, Iowa 50312; Donald B. Peschke, 2200 Grand Avenue, Des Moines, Iowa 50312. 11. Known bondholders, mortgagees, and other security holders owning 1 percent or more of total amount of bonds, mortgages or other securities: None. 12. (Does not apply.) 13. Publication Name: Woodsmith. 14. Issue Date for Circulation Data below: August 1996. 15. Extent and nature of circulation:

	Average no. copies each issue during preceding 12 months	Actual no. copies of single issue published nearest to filing date
A. Total no. copies printed (net press run)	378,561	352,823
B. Paid and/or requested circulation:		
1. Sales through dealers, street vendors and counter sales	21,865	21,342
2. Mail subscriptions (paid and/or requested)	310,376	286,975
C. Total paid and/or requested circulation	332,241	308,317
D. Free distribution by mail (samples, complimentary, and other free copies)	93	77
E. Free distribution outside the mail (carriers or other means)	0	0
F. Total free distribution	93	77
G. Total distribution	332,334	308,394
H. Copies not distributed		
1. Office use, left over, unaccounted, spoiled after printing	11,706	12,734
2. Returns from news agents	34,521	31,695
I. Total	378,561	352,823
Percentage paid and/or requested circulation	99.97%	99.98%

16. This statement of ownership will be printed in No. 108, the December, 1996 issue of this publication.
17. I certify that the statements made by me above are correct and complete. (signed) Donald B. Peschke, Publisher

A LOOK INSIDE

CONTENTS

Features

Classic Cherry Bed 6

Individual hardwood slats mortised into a curved top rail are just one of the features that make this elegant project an interesting challenge to build.

Routing Through Mortises 15

Our step-by-step instructions will show you how to cut perfect through mortises quickly and accurately. The secret is to use your router and a simple shop-made jig.

Children's Bookcase 20

This easy-to-build project features solid wood construction and a unique shelf system. There are three shelves that can lie flat or tilt back to "cradle" the books.

Wood Pens 24

Turning your own wood pens is a great way to use up small scraps of wood. And by using our step-by-step instructions and simple turning jig for the drill press, you don't even need a lathe.

Mantel Clock 28

From built-up moldings to a handy pull-out drawer, this project packs a lot of woodworking in a small package. But best of all, we kept the design simple enough so that you can build this clock from start to finish over a weekend.

Maple 33

Here's a look at several different types of figured maple — and some tips on working with this special wood.

Departments

Tips & Techniques 4
Shop Notes 18
Talking Shop 26
Reader's Jig 34
Sources 35

Classic Cherry Bed *page 6*

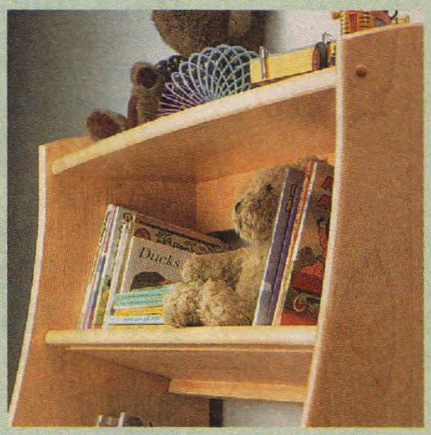

Children's Bookcase *page 20*

Wood Pens *page 24*

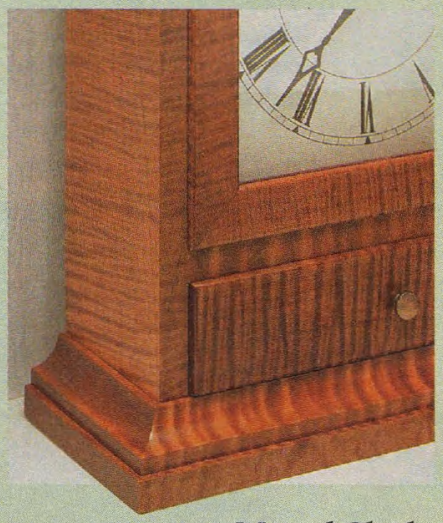

Mantel Clock *page 28*

TIPS & TECHNIQUES

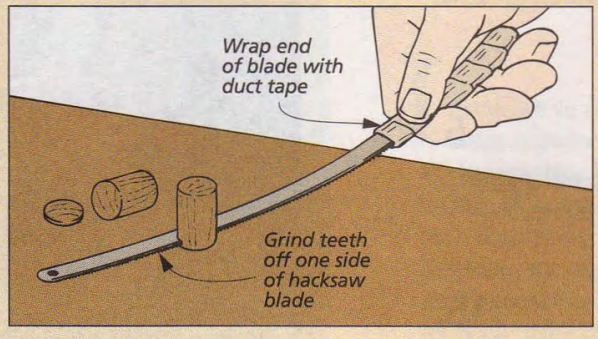

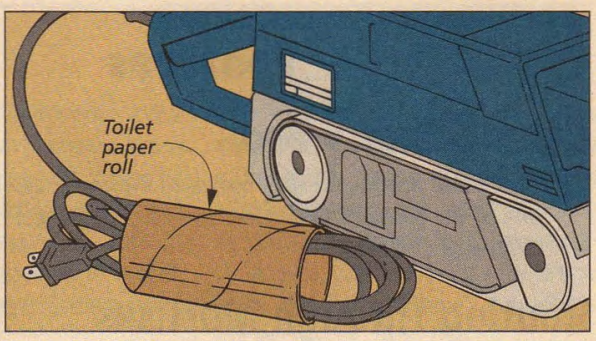

Flush Trim Saw

Recently, I had to cut several wood plugs flush with the surface of a project I was making. Since I didn't have a flush-cutting saw, I made my own.

I just took a hack saw blade and ground the teeth flat on one side. Then I wrapped one end with duct tape for a handle. The blade flexes to cut the plug off nearly flush, and then I sand it smooth.

John Osborne
South Kent, Connecticut

Cord in a Tube

I store a lot of small power tools on a shelf above my workbench. But I got tired of the cords always getting tangled up. To help prevent this from happening, I use the cardboard tubes from toilet paper rolls.

I just wrap the cord up and slip the tube around it. The tubes wear out eventually, but somehow I always seem to have an unending supply of them.

Fred Turner
Buena Park, California

Router Table Extension

Most router tables are too small for big jobs, so I built a removable table extension.

It's just a couple pieces of ¾"-thick plywood laminated together. I drilled a couple of holes on the edge of the extension and epoxied in a pair of 6"-long steel rods.

When I need a larger work surface, I just slide the table extension into a second pair of holes drilled in the edge of my router table.

Roy Mrock
Spruce Pine, Alabama

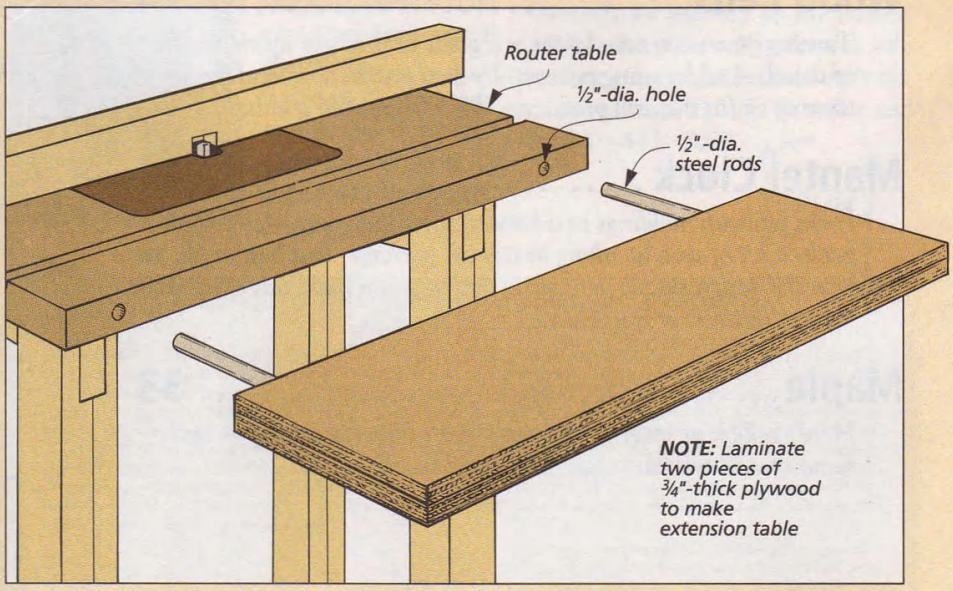

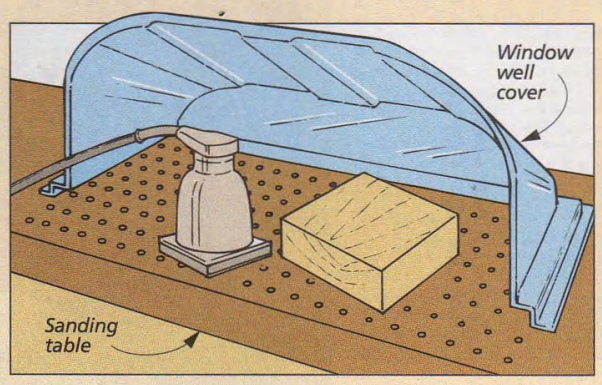

Dust Hood

A sanding table with a dust collector is great when you're sanding small projects. But a lot of the dust floats straight up into the air before it can get sucked into the dust port in the sanding table.

To help collect the dust, I use a plastic window well cover that I purchased at a home center, see drawing at left. This traps the dust so the sanding table can remove it from the air. When I'm finished sanding, I store the dust hood under my bench out of the way.

Harm Weber
Webster, Wisconsin

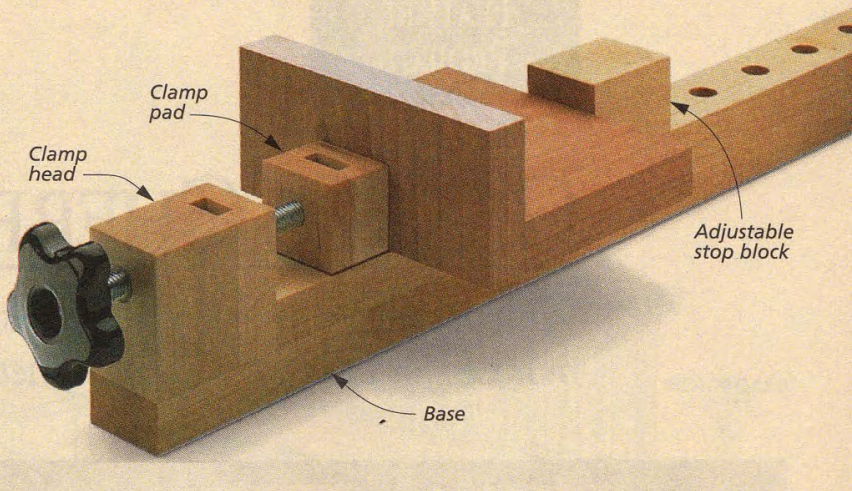

Shop-made Bar Clamp

I can't afford a shop full of bar clamps, so I make my own out of hardwood scraps, see photo at right.

My clamp uses a 3/8"-16 machine bolt and a square nut, see drawing below. The bolt fits through a couple of nylon spacers in the clamp head. Fitted over the head of the bolt is a wooden clamp pad. At the other end of the bolt is a knob. As you turn the knob, the bolt advances to apply clamping pressure against an adjustable stop block.

HEAD. The clamp head is made up of two pieces. A slot is cut in one piece that's just wide enough to hold a 3/8"-16 square nut. After gluing the two pieces together, drill a 1/2"-dia. hole all the way through the block.

PAD. The clamping pad is also a two-piece assembly. One piece has a slot wide enough to allow the bolt head to turn freely. The other piece is made from 1/2"-thick stock and has a 1/2"-dia. hole to allow the bolt to pass through it. To assemble the clamping pad, slip the bolt through the hole and glue the two pieces together.

BASE. The clamp base is just two pieces of 3/4"-thick hardwood. Glue and screw the clamp head to one of these pieces. Then glue the second piece on top of the first and cut the ends flush.

To make the stop block, drill a 1/2"-dia. hole in a block of wood and glue a short section of dowel in place. Then drill a series of holes through the base of the clamp to position the block.

Assembling the clamp is just a matter of sliding the square nut into the slot in the clamp head and threading the bolt through the block. Then to finish the clamp, epoxy the knob on the end of the bolt.

Calvin Ewald
Summit, New Jersey

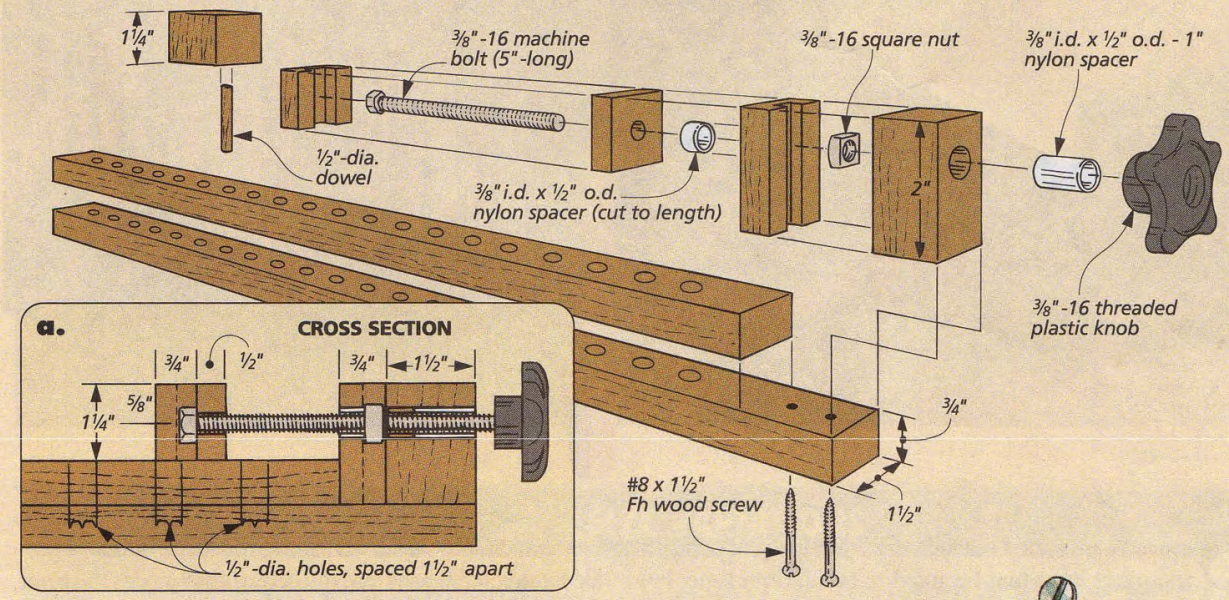

SUBMIT YOUR TIPS

If you would like to share an *original* shop-tested tip, send it to: *Woodsmith*, Tips and Techniques, 2200 Grand Avenue, Des Moines, Iowa 50312. Or if it's easier, FAX it to us at: 515-282-6741. Or use our E-Mail: 75330.2301@compuserve.com.

If published, you'll receive $30 to $150, depending on the published length. Include a brief explanation and sketch or photo. And don't worry, we'll rewrite the tip and redraw the art, if necessary. Also, *please* include a daytime phone number.

Handy Screws

Like a lot of woodworkers, I keep my nails and screws in glass jars with metal lids. But I also place a small magnet on the top of each lid along with a few of the nails or screws from that jar. That way, I don't have to open a jar every time I need a fastener.

Bill Feely
Kansas City, Missouri

FEATURE PROJECT

CLASSIC CHERRY BED

With this bed, you won't lose any sleep figuring out how to make all the mortises for the slats. With our method, it's as easy as counting sheep.

Several years back, I made a wish list of the pieces of bedroom furniture that I wanted to build. Over time, I've managed to build a lingerie dresser (Issue 53), a chest of drawers (Issue 58), and a nightstand (Issue 76). This bed is the last piece on my list, and it's one that I've been wanting to build for a long time.

CHALLENGES. But I was anxious to build this project for another reason than simply wanting to cross it off my list. It involves some interesting woodworking challenges. Like cutting tenons on the ends of the five-foot-long headboard and footboard rails. And coming up with a way of making all the mortises for the slats. (We've included a separate article on this technique. It starts on page 15.)

Like the other pieces of bedroom furniture, this bed contains some of the same design features, see photo above. For starters, it's made of solid cherry. Secondly, the headboard and footboard both feature the same bullnose profile found on the base and top of the other pieces. So even though I built all these pieces at different times, they still look like they belong together.

KNOCK-DOWN FASTENERS. One of the nice features of this bed is that it uses knock-down fasteners to connect the rails to the headboard and footboard (see page 35 for sources). These fasteners are not only extremely strong, but they can be quickly disconnected without any tools so the bed can be moved or stored easily.

SIZE. One more thing. The bed I made is designed to fit a queen-size mattress and box spring. However, if you want to build a twin-size or full-size bed, all you have to do is alter the length of bed side rails and the width of the headboard and footboard. To make this easier, we've provided the dimensions, see the box at right.

Construction Details

OVERALL DIMENSIONS:
71"W x 88½"D x 45"H (Queen-size)

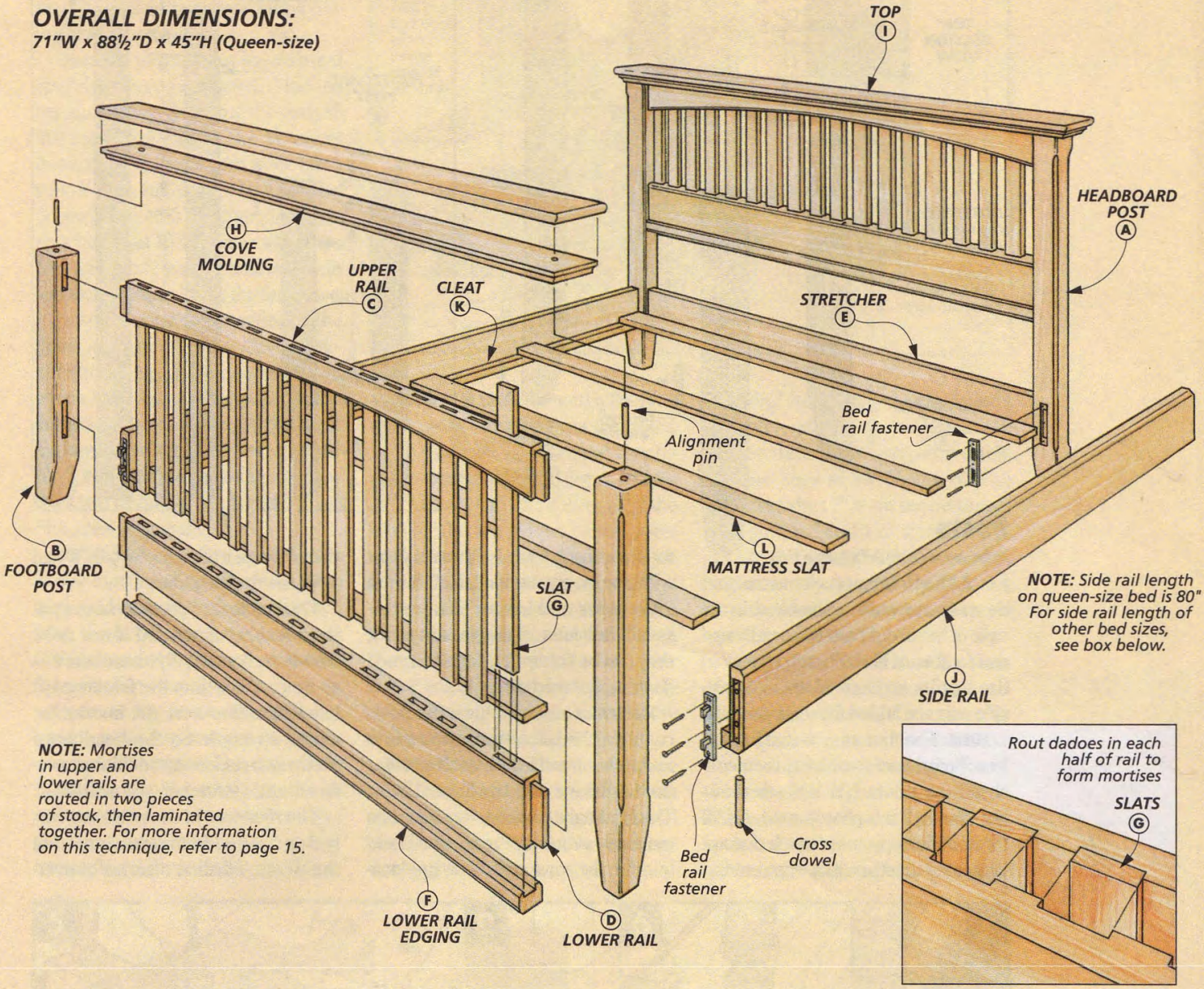

SIZE VARIATIONS

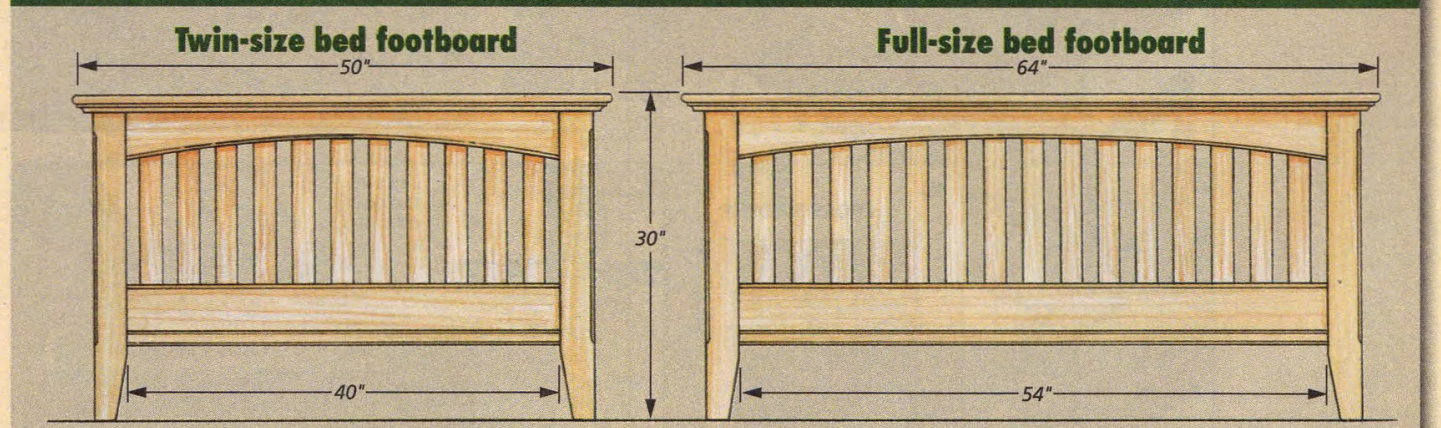

NOTE: *Side rails for twin-size bed measure 74" long*

NOTE: *Side rails for full-size bed measure 74" long*

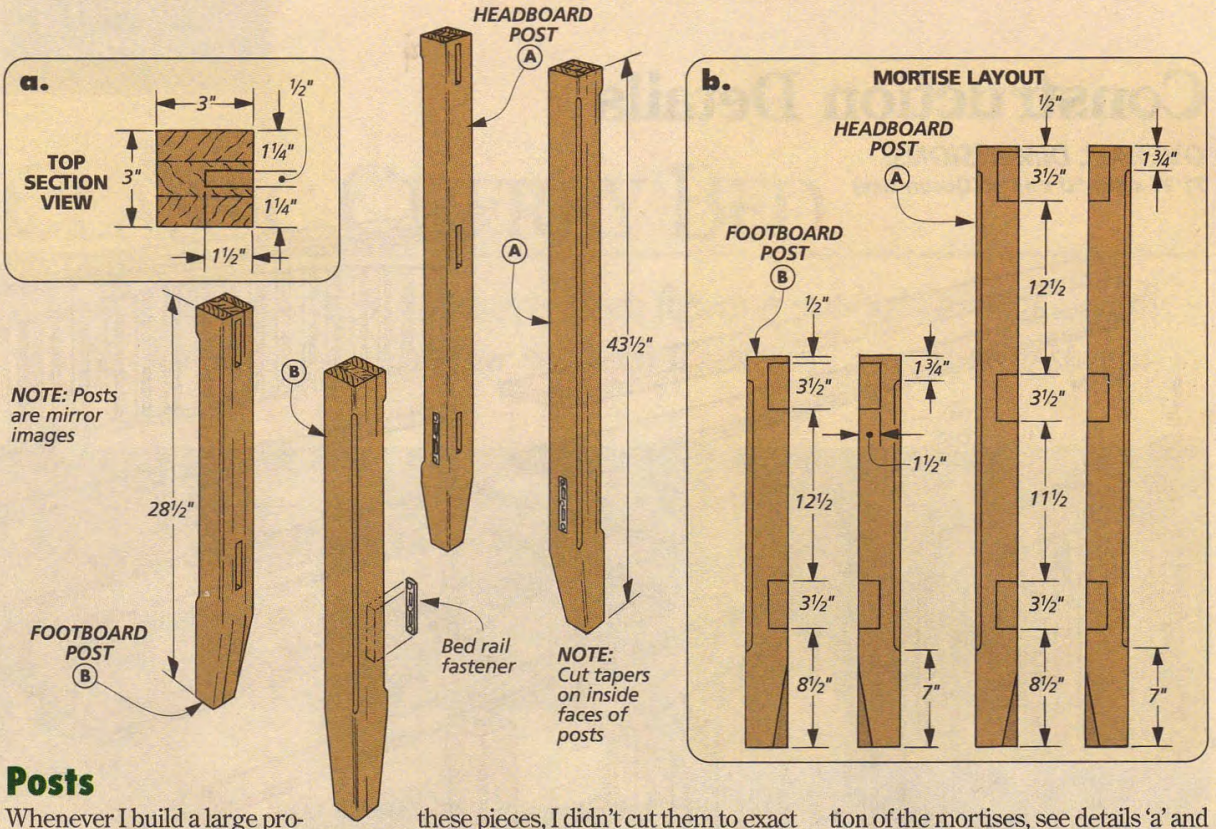

Posts

Whenever I build a large project, I like to break the construction down into separate assemblies. In the case of the bed, I built the headboard and footboard first. Then I connected the headboard and footboard with side rails and added the mattress slats.

POSTS. The first step in making the headboard and footboard is to construct the **posts (A, B),** see drawing above. Each post is made up of three 1"-thick pieces of stock that are laminated together. But when cutting these pieces, I didn't cut them to exact width or length. Instead, I left them a little wider and longer than necessary. Then after gluing up the posts, they can be squared up and trimmed down to finished size.

MORTISES. Once you have the posts cut to finished size, the next step is to make the mortises on each post for the footboard and headboard rails. The footboard posts each receive two mortises — one for the upper rail and one for the lower rail. For the location of the mortises, see details 'a' and 'b' in the drawing above.

The headboard posts are also mortised for the upper and lower rails. However, because the headboard is so much taller than the footboard, it has a stretcher near the bottom for added strength. So the headboard posts each receive an additional mortise for this stretcher, see detail 'b'.

The mortises in the posts are fairly deep (1½"). So to remove most of the waste, I drilled a series of over-

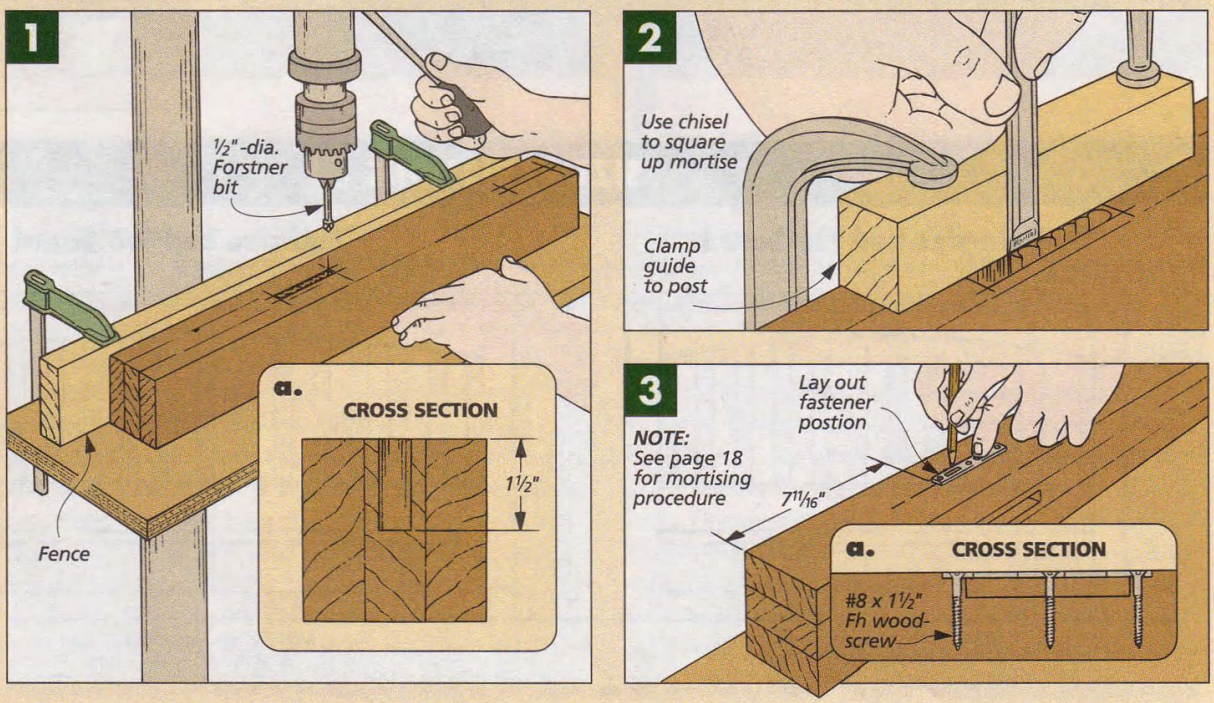

lapping holes with a Forstner bit and a drill press, see Fig. 1. Then I squared up the sides and corners with a paring chisel, see Fig. 2.

Once the mortises for the rails and stretcher were completed, I turned my attention to attaching the bed rail fasteners, see Fig. 3. The fasteners come in two pieces. One piece has a pair of slots and is mortised into the posts of the bed. The other piece gets attached later to the side rails of the bed and has a pair of hooks that fit and lock into the slots of the first piece.

Lay out the fastener mortises in the posts according to the dimensions shown in Fig. 3. To determine on which face of each post to mount the fastener, it helps to lay the posts out as they will be when the bed is assembled. For details on making the mortises and installing the fasteners, see Shop Notes on page 18.

TAPERS. After inserting the fasteners in the mortises and screwing them in place, I tapered the bottom of each post. But I cut tapers on only the two inside faces of each post — not all four, see Figs. 4 and 4a.

Because the posts are so thick, I used a band saw instead of a table saw to cut the tapers. The easiest way to do this is to lay out the tapers on each post and cut to the waste side of the line. Then smooth out the taper by sanding right up to the pencil line.

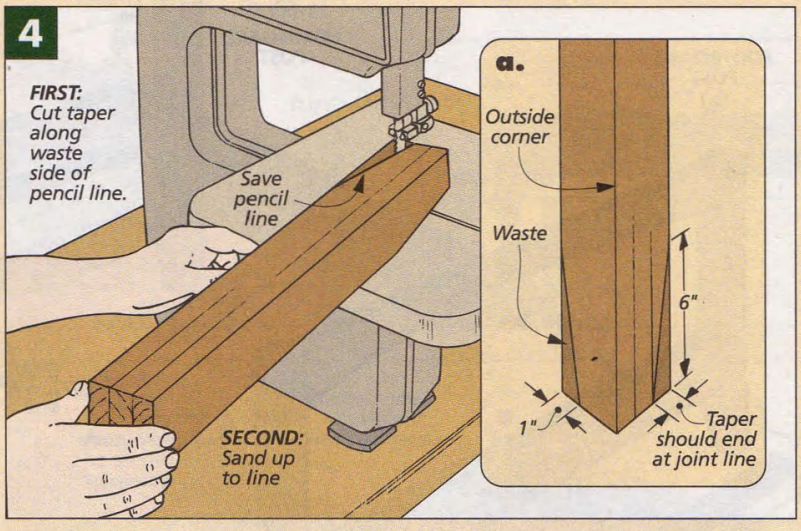

ROUND OVER EDGES. To soften the look of the posts, I rounded over the edges. To do this, I used a 1/4" round-over bit in the router table, see Fig. 5. But it's important not to round over all of the edges. The top edges of the posts aren't rounded over (a cap will be added later that covers these). And because the inside and bottom edges of the tapered section won't sit flat on the router table, I didn't round over these edges either. Instead, lightly sand them just enough to break the sharp corners, see Fig. 6.

STOPPED CHAMFERS. There's one more detail to add to the posts to finish them off. The two *outside* edges of each post have 3/8" stopped chamfers, see drawing on previous page.

Laying out a stopped chamfer isn't difficult — just mark a couple of stop lines on the edges of the posts to indicate the ends of the chamfers. The chamfers start 7" from the bottom of each post and end 1 3/4" from the top, see Fig. 7. To rout the chamfers, start near one end and carefully backrout up to the stop line. Then rout forward up to the opposite stop line.

The chamfer bit will leave the ends of the chamfers a little rough and uneven. So I smoothed them out by hand. To do this, just wrap some sandpaper around a dowel and lightly sand the ends of each chamfer, see Fig. 8. This is also a good way to remove any burn marks that may have been left behind by the router bit.

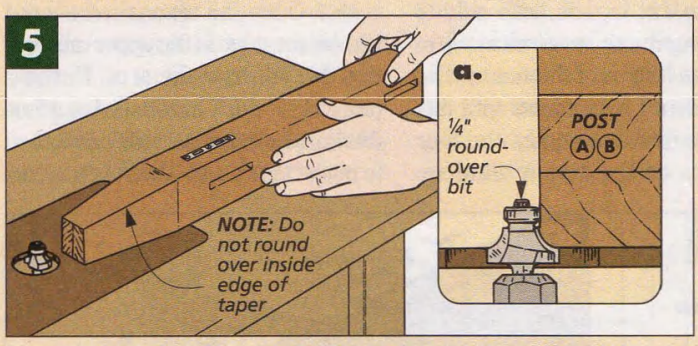

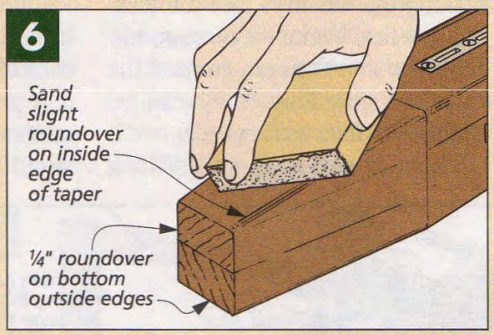

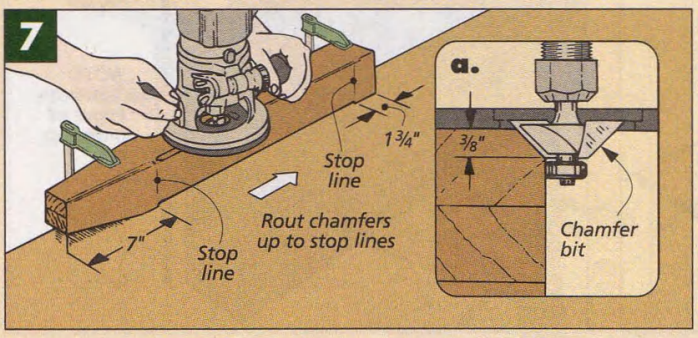

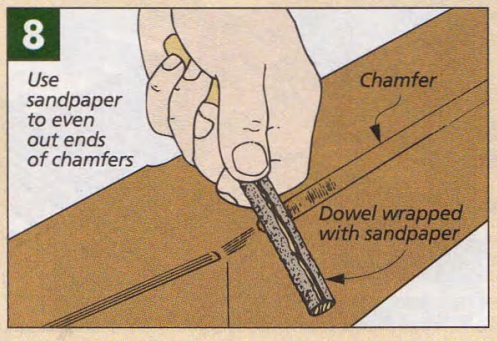

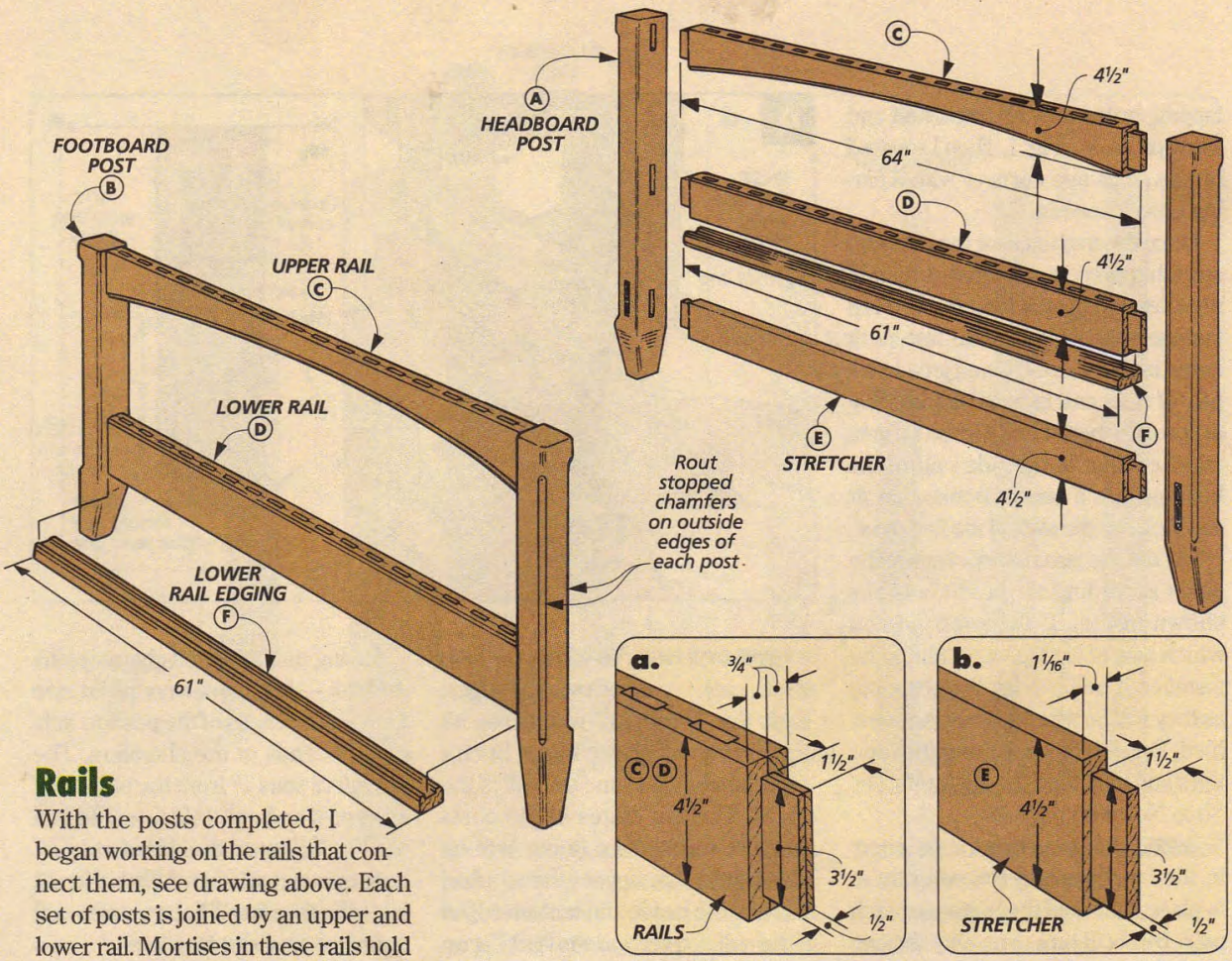

Rails

With the posts completed, I began working on the rails that connect them, see drawing above. Each set of posts is joined by an upper and lower rail. Mortises in these rails hold a row of vertical slats.

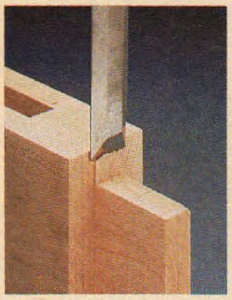

▲ *Trim the top and bottom shoulders of each tenon with a chisel.*

RAILS. The **upper rails (C)** and **lower rails (D)** each start off as two 5" x 64" pieces of ¾"-thick stock. This allows you to rout a series of shallow (¼") dadoes in each half, see Fig. 9. Then when the two pieces are glued together, you end up with a row of mortises, see Fig. 10. (For details on making the mortises, see the technique article beginning on page 15.) After the mortises are cut and the rails are glued up, they can be trimmed to final width (4½").

The next step is to cut 1½"-long tenons on the ends of each rail, see detail 'a' above. But trying to cut tenons on pieces this long is a little tricky. So to help support the rails, I used an "outrigger" alongside my table saw and a hold down clamped to my miter gauge fence (see Shop Notes on page 19).

I like to cut tenons with a dado blade, using my rip fence as a stop to control the length of the tenon. The only problem I have found with this method is that sometimes the four shoulders of the tenon wind up "stepped" or uneven. To prevent this, I *intentionally* cut stepped shoulders by sliding the workpiece about 1/16" away from the rip fence when cutting the *top* and *bottom* shoulders of the tenon. Then later I come back with a chisel and trim these shoulders so they're flush, see photo in margin.

ARCS. Once the tenons were cut, I laid out the arcs on the upper rails, see Fig. 11. To draw the arcs, I used a piece of ⅛"-thick hardboard as a flexible curve. And to hold the hardboard in place, tack a small brad in the cen-

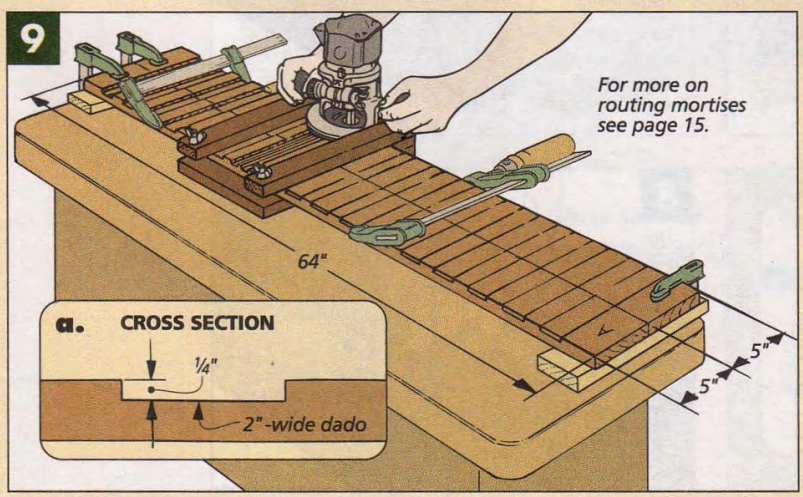

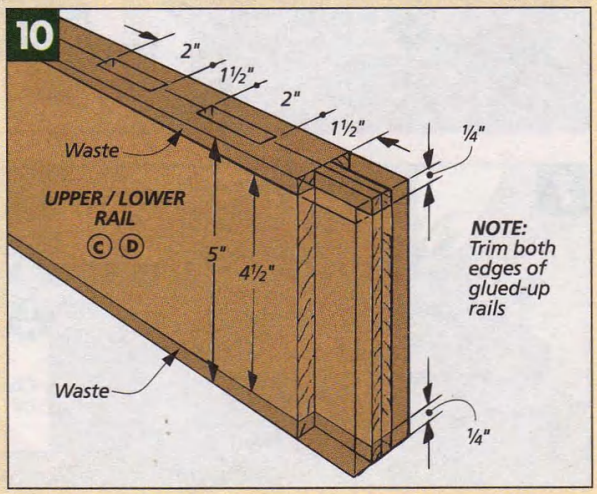

ter of the rail on the waste side of the curve and clamp a couple of wood blocks at each end of the rail.

To cut the arc, I used a band saw, making sure to cut on the waste side of the layout line. And a well-sharpened spokeshave made quick work of removing the saw marks left behind by the band saw, see Fig. 12. (For more on using a spokeshave, see Talking Shop on page 27.)

CHAMFERS. To add a finishing touch to the arcs, rout a 1/4" chamfer to each edge, see Figs. 13 and 13a. Then chamfer the top edges of the lower rails to match, see Fig. 13b.

STRETCHER. Before assembling the rails and posts, there's one more part to be made. To give the headboard a little more stability, a **stretcher (E)** is added below the rails, see drawing.

Because the stretcher will be concealed by the mattress and box spring, I didn't worry about making it the same thickness as the rails. It's just a piece of 1 1/16"-thick stock with 1 1/2"-long tenons cut on each end, see detail 'b' in drawing on page 10.

ASSEMBLY. After cutting tenons on the ends of the stretcher, I was ready to start assembling all the pieces. But I ran into a slight problem. I discovered that I didn't have enough clamps long enough to span the entire width of the headboard and footboard.

So I improvised. I used half a dozen smaller clamps, some clamping boards, and a couple of scrap blocks cut to fit down through the rail mortises, see Fig. 14.

EDGING. After gluing up the headboard and footboard, the next step is to add **edging (F)** to the bottom of the lower rails, see Fig. 15 and drawing on page 10. This edging serves two purposes. First, it covers the exposed ends of the mortises. Second, it prevents the slats from sliding down all the way through the mortises.

The edging is nothing more than a piece of 1 1/16"-thick stock, cut 2" wide and long enough to fit between the posts of the headboard and footboard, see Fig. 15. A groove cut along the length of the edging allows it to fit snug over the lower rails, see Fig. 15a.

Before attaching the edging, I routed 1/8" chamfers on all four edges. Then glue and clamp the edging to the bottom rails.

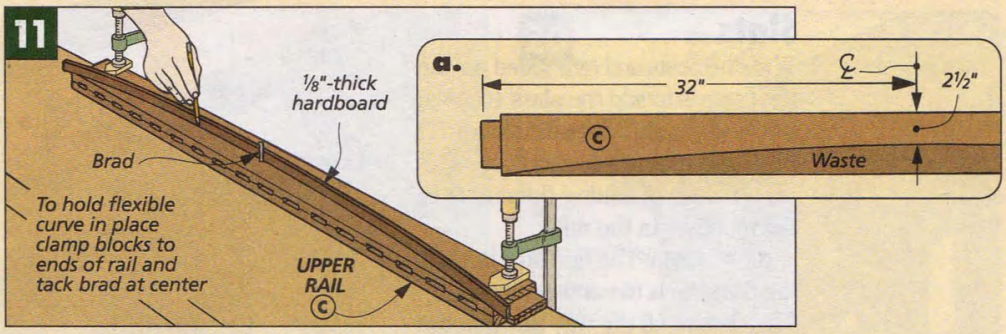

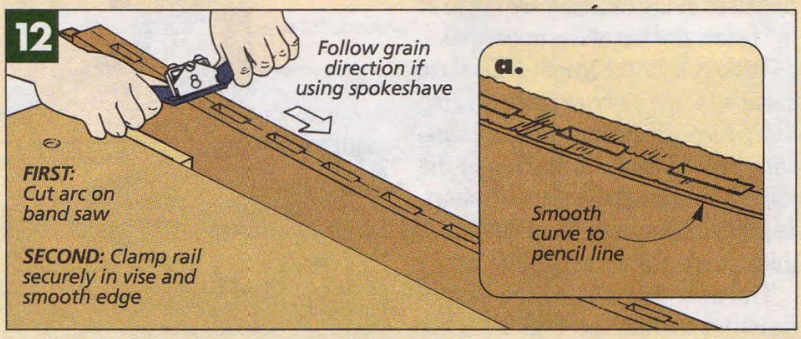

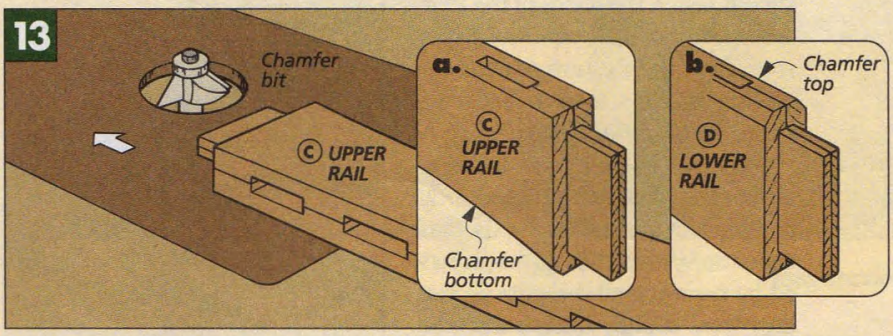

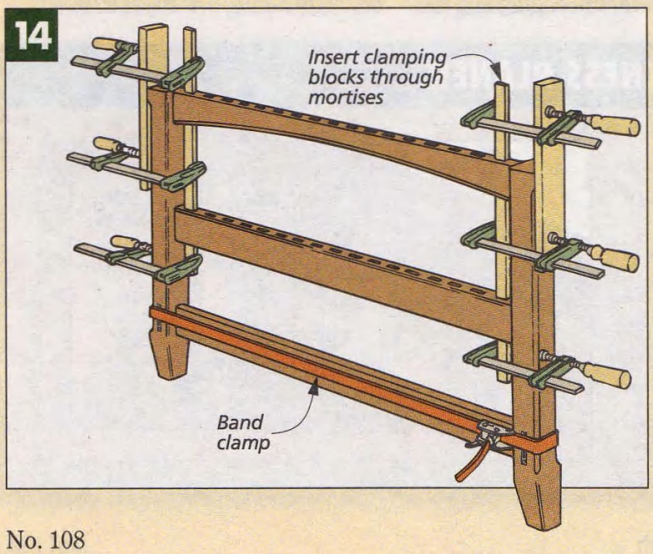

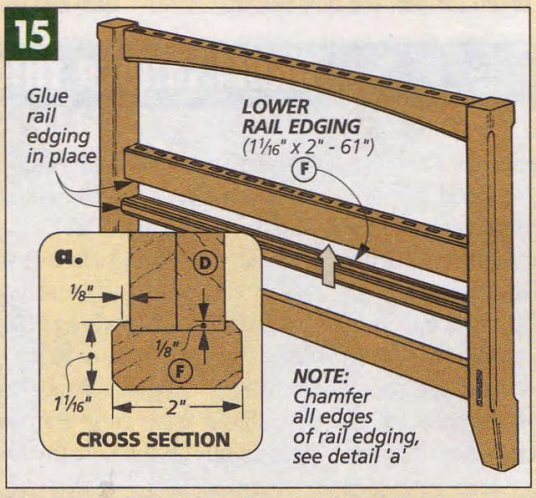

Slats

With the posts and rails glued up, the next step is to add the **slats (G)**, see drawing at right. Since the slats don't require tenons on the ends, it's simply a matter of cutting them to fit in the mortises in the rails.

CUT TO LENGTH. The first step in making the slats is to cut them to length. The slats fit all the way through the mortises in the rails and are cut to fit 1/8" below the top of the upper rail.

To determine the length of the slats, I slipped a thin, narrow piece of scrap down through the mortises and measured the distance to the top of the rail. Then I cut all the slats 1/8" shorter than this measurement out of 3/4"-thick stock. (Mine were 20 3/8" long.)

The next step is to rip the slats to finished width, see Fig. 16. This should match the width of the mortises in the rails (2" in my case). Safety note: Since the slats are so narrow, I used a push block to safely feed them past the saw blade, see Fig. 16.

THICKNESS. Now all that's left is to reduce the slats to the proper thickness to fit in the mortises. (My slats ended up 1/2" thick.) To do this, I started by resawing all the slats so that they were slightly thicker than the mortises (9/16"), see Fig. 17. Again, I used a push block for safety reasons.

When all the slats were resawn, I was able to sneak up on the final thickness for a perfect fit in the mortises. (I made my slats 1/2" thick.) A thickness planer is the easiest way to do this. But if you don't have one of these tools, another way is to use a drill press set up with a fence and a large drum sander, see box below.

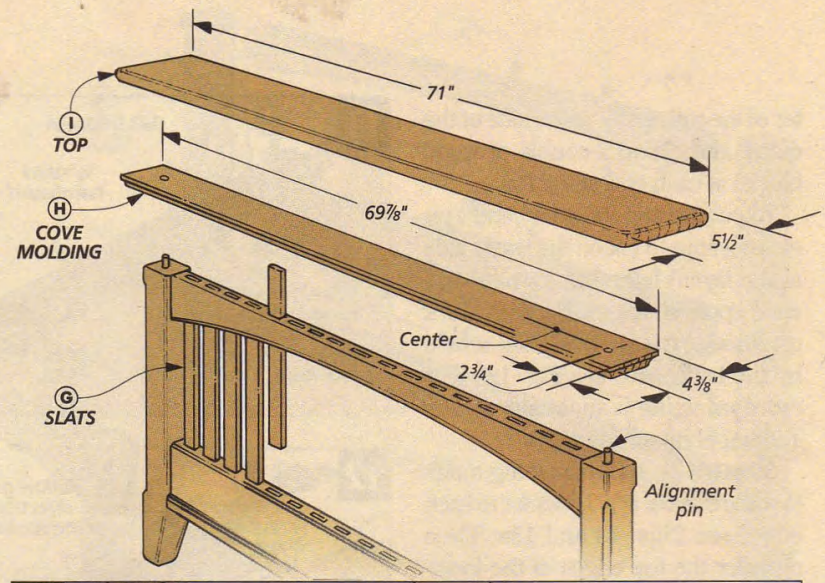

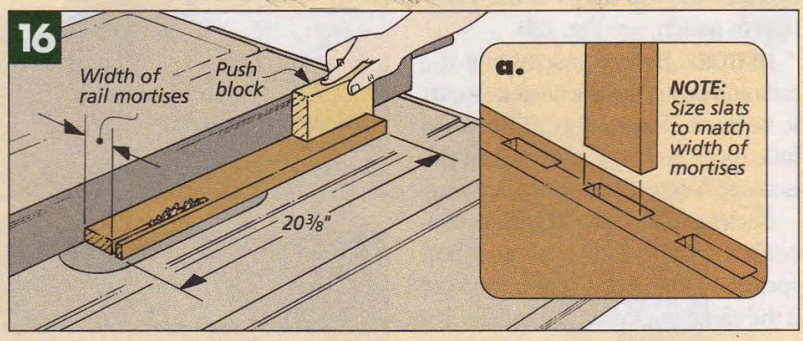

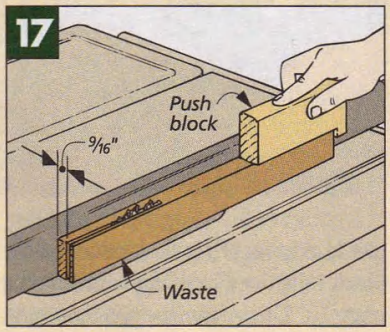

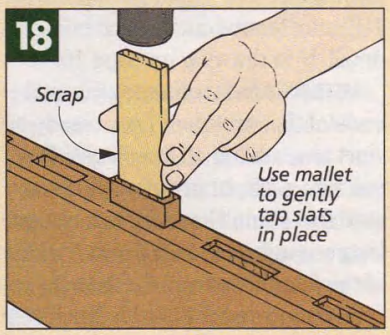

INSERTING THE SLATS. Once you've finished sanding all the slats, they can be inserted in the headboard and footboard. I didn't use any glue on the slats — they'll be held in place between the lower rail edging and the cap that's added later. Most of the slats slipped right into place without any trouble. But for a few of the more stubborn slats, I used a mallet and a thin piece of scrap wood to gently tap the slats home, see Fig. 18.

DRUM SANDER THICKNESS PLANER

To reduce the thickness of the slats for the bed, all you need is a drill press and a drum sander. (Since the slats are 2" wide, you need a drum sander that's at least 2 1/2" tall.

FENCE. Just clamp a fence to your drill press table near the drum sander. Then feed the slats through the sander one at a time, pushing them along the fence, see drawing. (Make sure to feed the slats in the opposite direction of the rotation of the drum, see detail 'a'.)

Also, you'll get better results if you don't try to sand the slats down to finished thickness in a single pass. Instead, make three or four passes, moving the fence a little closer to the drum each time so you can "sneak up" on the final thickness.

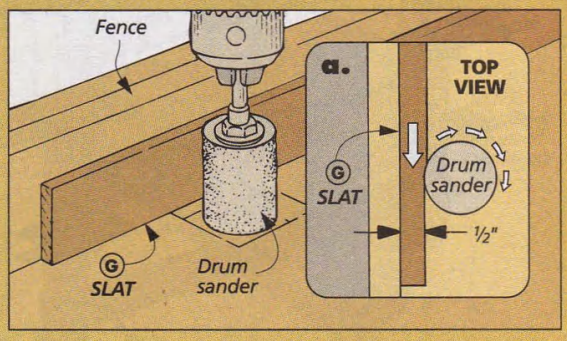

Cap

All that remains to complete both the headboard and footboard is to add a two piece cap, see drawing at left. The cap consists of a cove molding and a top with a bullnose edge profile.

COVE MOLDING. The two **cove moldings (H)** are pieces of 3/4"-thick stock that are cut to finished size. I made my cove molding pieces 4 3/8" wide and 69 7/8" long. Then I routed a 1/2" cove around all four bottom edges of each piece, see Fig. 19.

To complete the cove molding, all that's left is to drill a couple of 1/2"-dia. holes for a pair of alignment pins, see Fig. 20. To drill these holes, I centered the cove moldings on the length and width of the head and footboards and clamped them in place. Then I drilled holes through the molding pieces 1/2" deep into the posts.

TOP. The two **tops (I)** are also pieces of 3/4"-thick stock (5 1/2" x 71"). Both the top and bottom edges of the top are rounded over to create a bullnose profile. First I rounded over the bottom edges with a 1/2" roundover bit. Then for the top edges, I used a 1/4" roundover bit, but I set it only 3/16" deep, see Figs. 22 and 22a.

Like the cove molding, the top also has holes for the alignment pins, but the procedure for drilling them is a bit different. Start by laying the top face down on your workbench. Then place the cove molding centered on top of the top piece, also top face down. Now clamp the two pieces down and use the holes in the cove molding as guides for drilling two 1/2"-deep holes in the top piece, see Fig. 23.

ASSEMBLY. Before assembling the cove molding and top to the bed, I cut four 1 11/16"-long alignment pins from a piece of 1/2"-dia. dowel stock. Then I glued them into the holes in the posts. The pins keep the cap pieces aligned during the glue-up.

To attach the caps, glue the cove moldings to the head and footboard. Finally, glue the tops down to the cove moldings, see Figs. 24 and 24a.

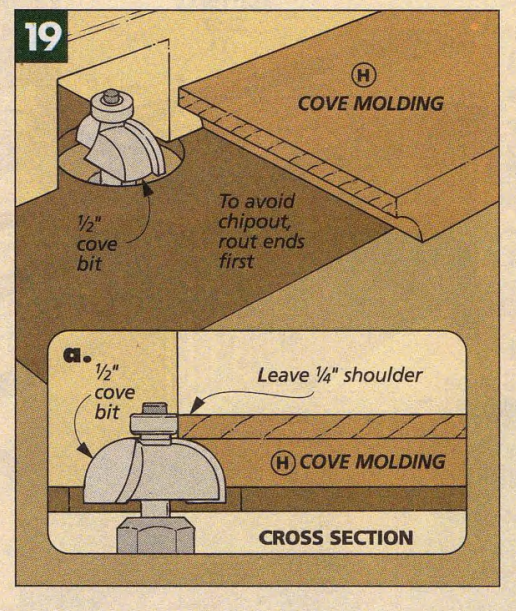

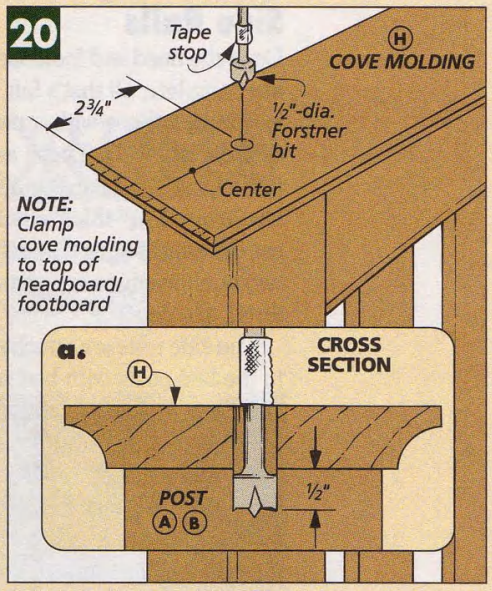

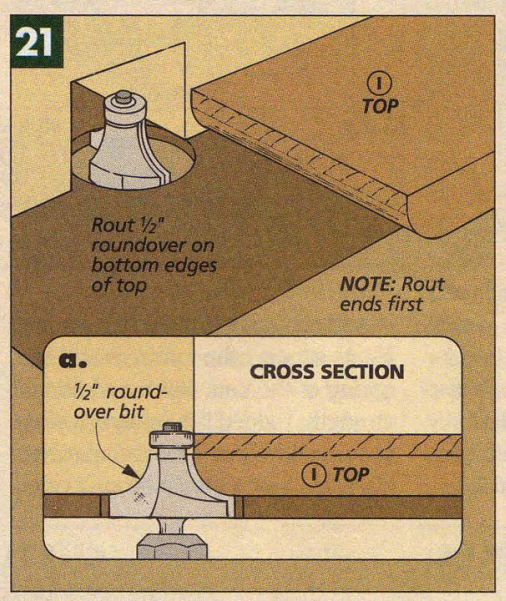

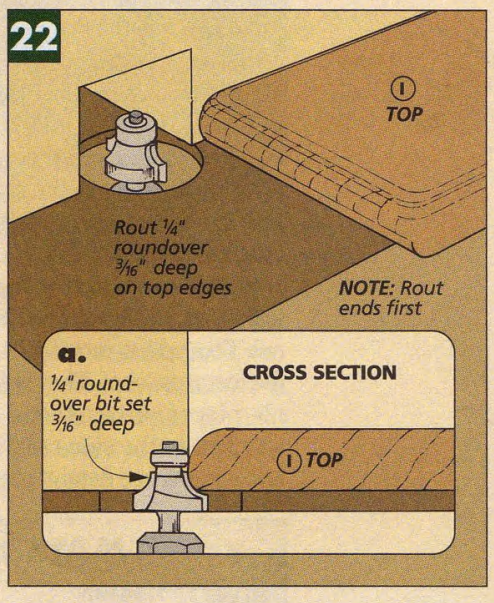

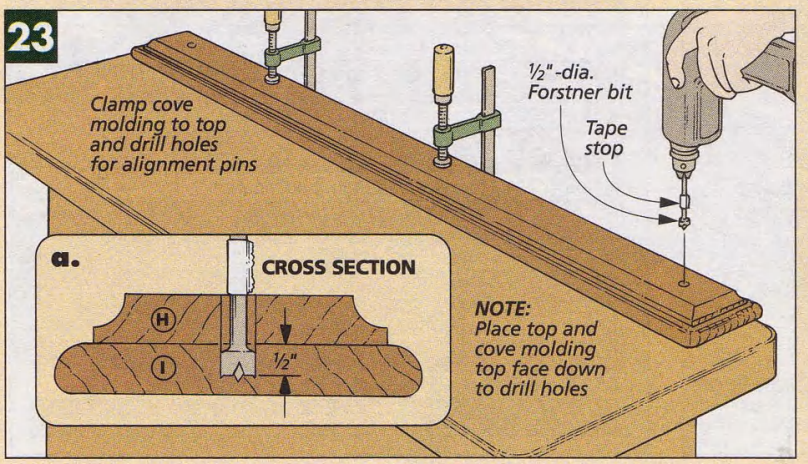

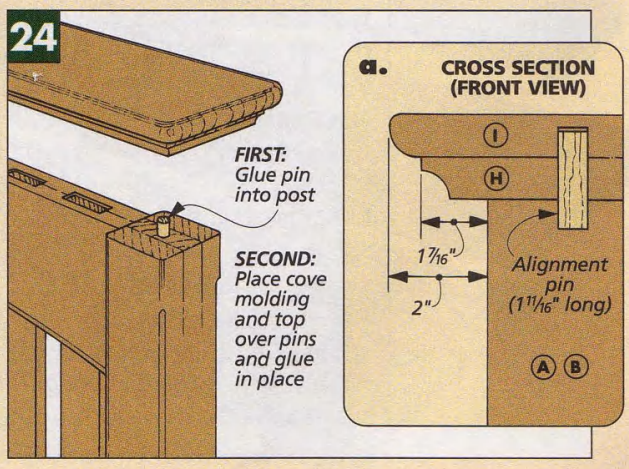

Side Rails

Once the head and footboard are complete, all that's left is to connect them with a pair of **side rails (J)**. These are just a couple of boards cut to size from 1 1/16"-thick stock, see drawing at right. Then the two outside edges are chamfered, see detail 'a'.

The side rails are attached to the bed posts with bed rail fasteners. These fasteners are mortised into the ends of each rail and connect with the hardware that was installed earlier in the bed posts. (See Shop Notes on page 18 for details on installing the bed rail fasteners.)

Once the fasteners are fitted into the mortises, they're held in place with woodscrews. But I was worried about the screws holding, since they're driven into end grain. So I inserted 1/2"-dia. cross dowels from the bottom edges of the side rails to give the screws something to "bite" into, see detail 'b'.

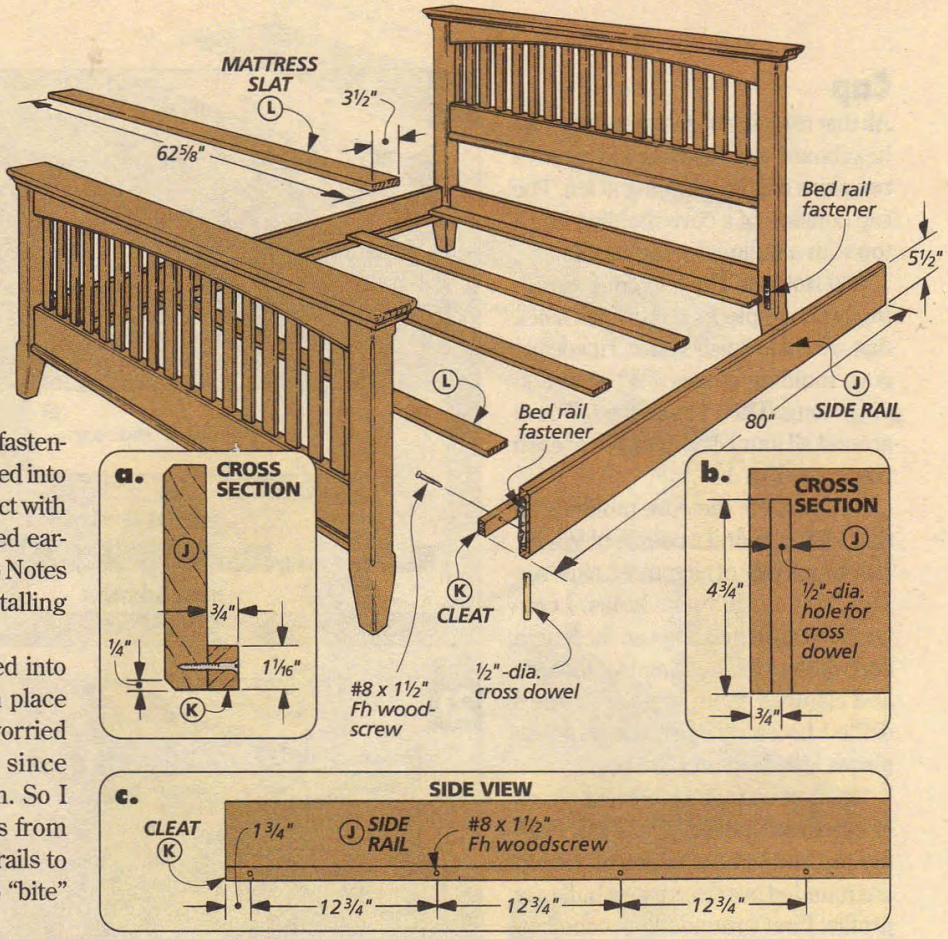

CLEATS. Before attaching the side rails to the bed, I added a **cleat (K)** to each rail. These cleats provide a support for the matttress slats. They're just a couple pieces of hardwood that are attached to the side rails with glue and screws, see details 'a' and 'c'.

MATTRESS SLATS. The side rails and cleats support the mattress and box spring of the bed. But for additional strength, I added five **mattress slats (L)**. I used cherry for the mattress slats, but since they'll be concealed by the box spring, any hardwood will work. The slats aren't fastened to the bed — they just sit on the cleats.

FINISH. Finally, to finish the bed I wiped on three coats of an oil finish, sanding lightly between coats. W

MATERIALS

HEAD/FOOTBOARD

A	Headbd. Posts (2)	3 x 3 - 43 1/2
B	Footbd. Posts (2)	3 x 3 - 28 1/2
C	Upper Rails (2)	1 1/2 x 5 (rgh.) - 64
D	Lower Rails (2)	1 1/2 x 5 (rgh.) - 64
E	Stretcher (1)	1 1/16 x 4 1/2 - 64
F	Lwr. Rail Edgings (2)	1 1/16 x 2 - 61
G	Slats (34)	1/2 x 2 - 20 3/8
H	Cove Moldings (2)	3/4 x 4 3/8 - 69 7/8
I	Tops (2)	3/4 x 5 1/2 - 71

SIDE RAILS

J	Side Rails (2)	1 1/16 x 5 1/2 - 80
K	Cleats (2)	1 1/16 x 3/4 - 80
L	Mattress Slats (5)	3/4 x 3 1/2 - 62 5/8

SUPPLIES

- (4) 4" Bed Rail Fasteners
- (38) #8 x 1 1/2" Fh woodscrews
- (1) 1/2"-dia. dowel 36" long (for alignment pins and cross dowels)

CUTTING DIAGRAM

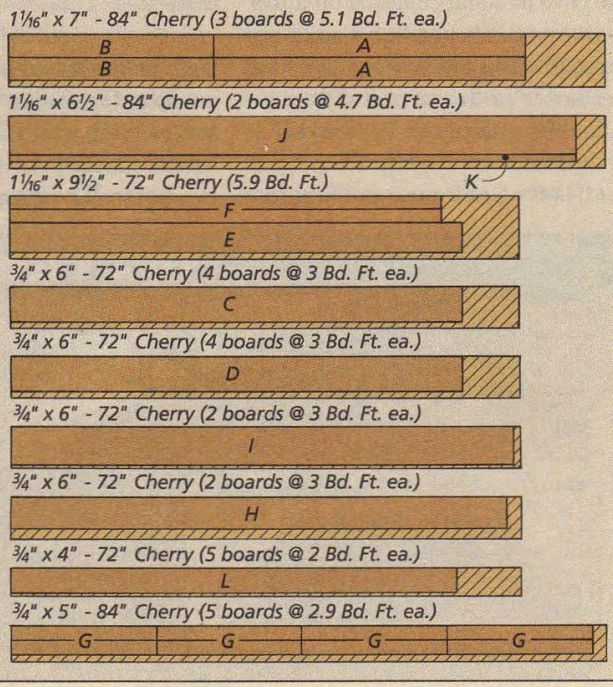

ROUTING THROUGH MORTISES

How do you make a through mortise in a workpiece? One answer is to start with two separate pieces and rout half a mortise in each one.

When Ted, our creative director, showed me the design for the cherry bed, all I could think of was having to chop out all those mortises for the slats in the head and footboard.

But Ted came up with an unusual technique that really speeds up the process. Instead of cutting traditional mortises in a solid rail, we used a special jig to rout a series of shallow dadoes in a pair of boards. Then the boards are laminated with the dadoes facing each other. What you end up with is a rail with a completed row of through mortises.

LAYOUT. There's a total of eight rail pieces in the bed (two for each rail). But I started by laying out the dadoes on just one board. To do this, clamp a tape measure to the board. Then starting 3" from either end, mark out 2"-wide dadoes spaced 1½" apart, see Fig. 1 and detail 'a'. (The 3" at each end allows for a tenon plus the space between the slats and the bed post.)

To keep the dado spacing identical in all the rails, I used this piece as a guide or "story stick" for laying out the dadoes on the other boards. But since the dadoes are cut in pairs, you only need to draw layout lines on half the boards. So just transfer the lines from the first board to three others, see drawing below.

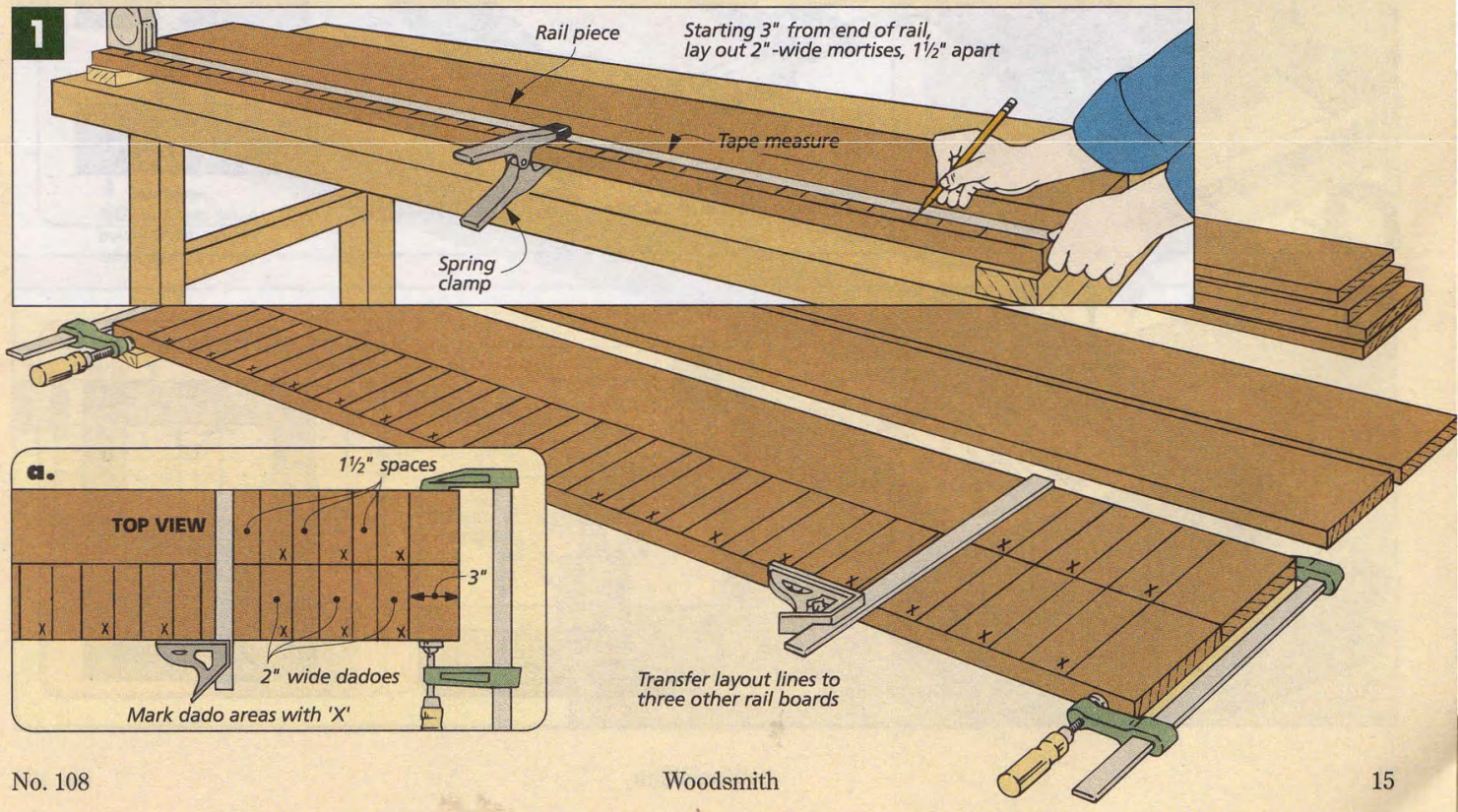

With all the dadoes laid out, the next step is to rout them. The trick here is to keep the router inside the layout lines. To do this, I used a jig that "corrals" my router and prevents it from cutting beyond the area marked out for each dado.

MAKING THE JIG. To build the jig, I started with an 11¼" x 14" base made out of ¾"-thick material, see drawing at right. (I used MDF, but plywood or solid wood will also work.)

To square the jig with the edge of the workpiece, I glued a 2"-wide edge guide to one end. Note: This guide should be exactly the same thickness as your rail pieces (¾" in my case).

Next, cut a couple of 2" wide strips for the fences to guide the router. The important thing is to attach the first fence at a perfect right angle to the edge guide. To do this, I used a square to position the fence, clamped it in place, and then drilled a couple of shank holes, see Fig 2. I attached the fence with glue and woodscrews.

The second fence must also be square to the edge guide, but this time I used a different approach. To make sure the fences are parallel, I used a spacer to position the second fence, see Fig. 3. But since the width of the dadoes will be determined by the distance between the fences, the width of the spacer is critical.

To find the spacer's width, simply subtract the diameter of your router bit (I used a ¾" straight bit) from the diameter of your router base (6" in my case). Then add 2" for the width of the dado. (I ended up needing a 7¼"-wide spacer.)

After cutting the spacer, use it to position the second fence while attaching it to the jig. Then to allow the fences to be tightened down over the rail pieces, I added carriage bolts and wing nuts at the ends of each

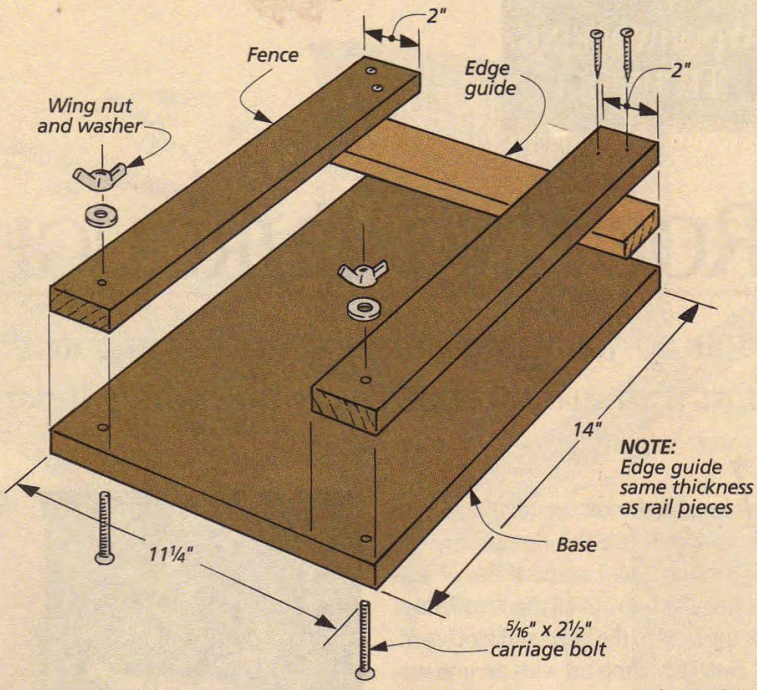

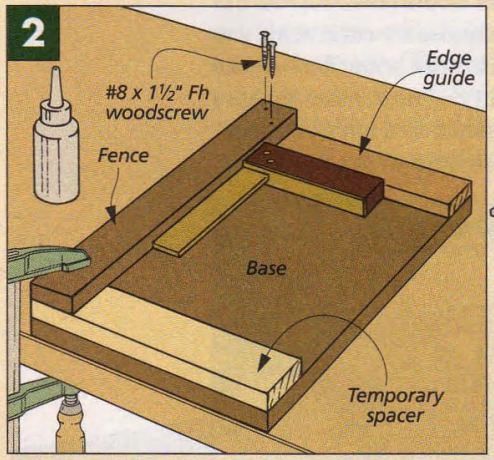

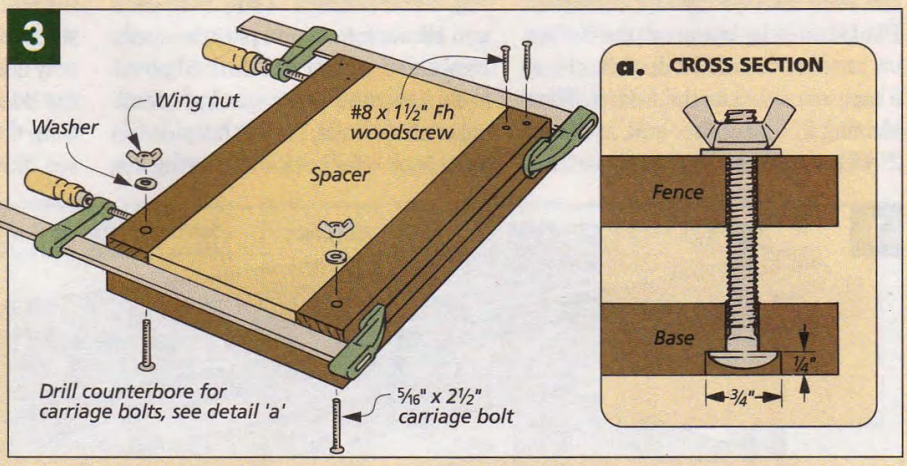

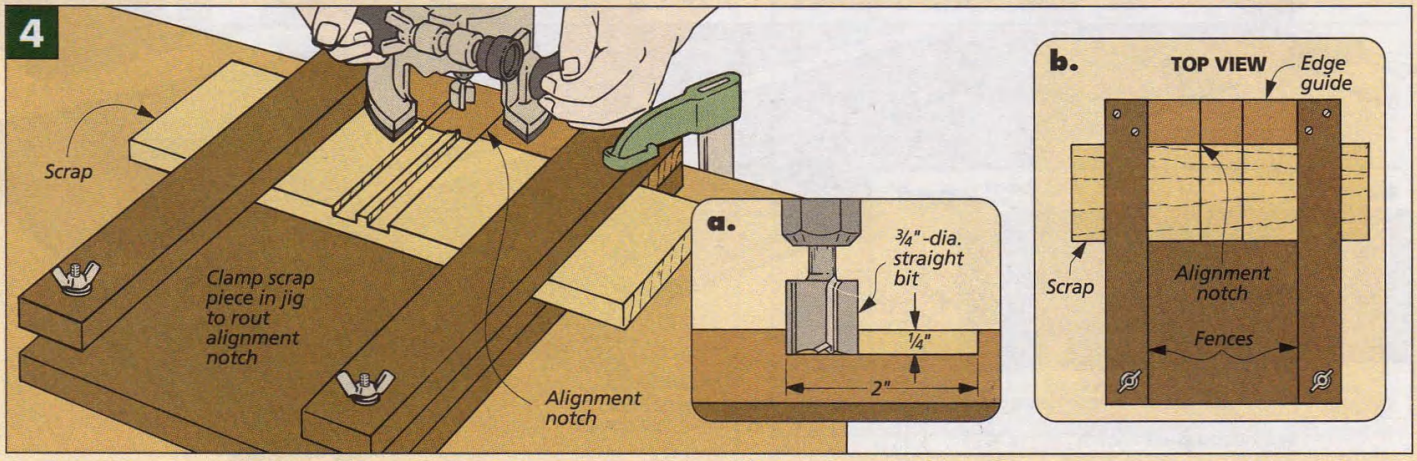

fence. (You'll need to drill a hole and counterbore for each carriage bolt.)

ROUT NOTCH. In order to position the jig properly, you'll need to rout a notch in the edge guide, see Fig. 4. This notch is used as a reference to line up the jig with the layout lines.

To rout the alignment notch, just slip a scrap piece of wood in the jig against the guide and tighten down the wing nuts. Then set your router bit to cut a dado equal to half the desired thickness of the completed mortises (1/4" in this case). Now rout a dado in both the scrap and the edge guide of the jig, see Fig. 4.

USING THE JIG. Once the jig is completed, routing the dadoes is a snap. Simply slide the jig over the first pair of rails and clamp the rails together and then down to your workbench. Note: To support the rails while they're in the jig, I placed a couple of riser blocks underneath them at the ends, see Fig. 5. Now label each rail piece so you can keep them together when it comes time for assembly.

To rout the first pair of dadoes, align the notch with the first set of layout lines and tighten down the wing nuts. Since the bit I used was only 3/4" wide, I routed each dado in three passes, see Fig. 5. And because the bit is not always centered in the base of the router, make sure to hold the router in the same relative position for each pass. (In other words, don't rotate the router between passes.)

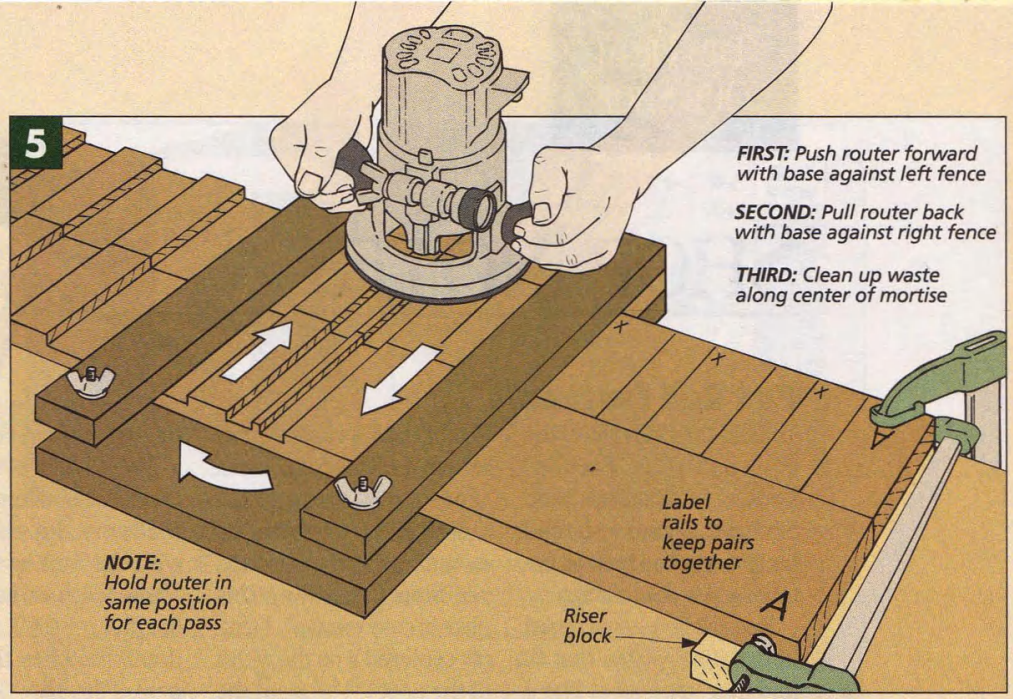

After you rout the first dado, just loosen the wing nuts, move the jig down to the next set of layout lines, and repeat the process. When you've routed all the dadoes, do the same with the other three rail pairs.

GLUE-UP. The second part of the process is gluing the rail halves together, see Fig. 6. There's just a couple of points to keep in mind here.

First, I wanted to avoid having to clean up a lot of glue squeeze-out inside the mortises. So I applied the glue sparingly, and I kept it away from the edges of the dadoes.

Second, I wanted to make sure the dadoes remained lined up while clamping the pieces together. So I made a couple spacer blocks to fit in the mortises, see Fig. 7. Then I ran a thin piece of wood through each mortise to remove any glue, see Fig. 7a.

Finally, after the glue was dry, I removed the clamps and cut about a 1/4" off each edge of the rails to trim them to finished width (4 1/2"). W

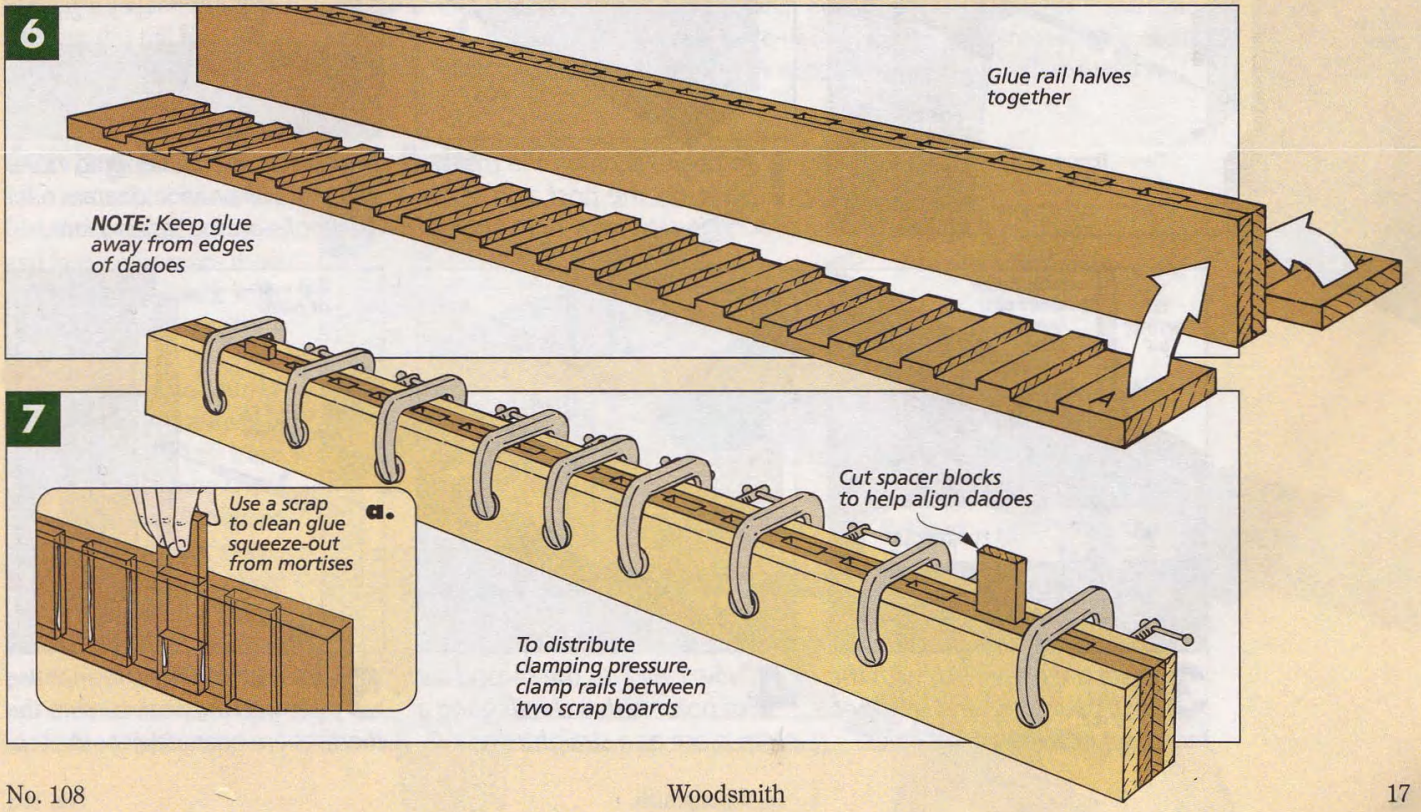

SHOP NOTES

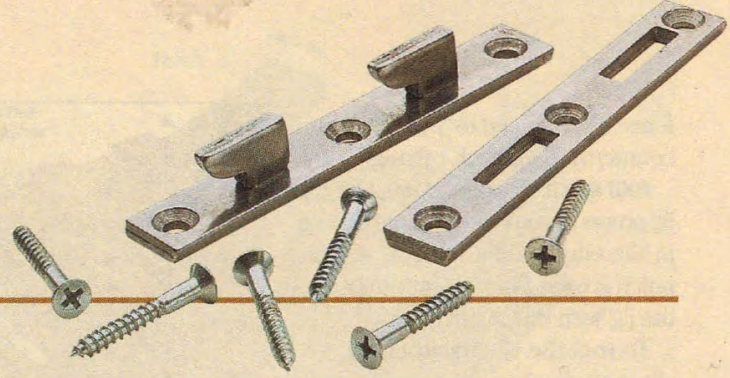

Bed Rail Fasteners

To hold the side rails to the posts on the bed, I needed a strong knock-down joint. So I used some special hardware called bed rail fasteners, see photo above.

Bed rail fasteners consist of two steel plates that fit together somewhat like a locking mortise and tenon joint, see drawing below. The "tenon" plate has two tapered hooks that fit in the "mortise" plate and draw the two together.

Note: Bed rail fasteners come in several sizes. But for this bed, I chose 4" fasteners (4⅛" actual size). (For sources, see page 35.)

MORTISE PLATE. I started by mounting the mortise plate, see Step 1. Locating this plate is easy enough. I simply centered it on the width of the post 7 11/16" from the bottom, see Step 1.

After you have scribed around the mortise plate, the next step is to drill two series of overlapping holes.

First, ⅜"-dia. holes are drilled ½"-deep to provide clearance for the hooks on the tenon plate, see Step 2.

The second set of holes creates a shallow mortise that puts the plate flush with the face of the post. These holes are larger than the first set (½"), and their depth matches the thickness of the plate (⅛"-deep), see Step 3.

I left the deeper holes rough. But the holes that hold the plate have to be pared to match the outline of the plate, see Step 4. So to give me a clean, straight edge, I clamped a board along the layout lines.

When attaching the fasteners, keep in mind that there is a top and a bottom end to the plate, see Step 5. (The slots should be closer to the top.)

Note: You may need to redrill the countersink on the fasteners to get the #8 screws to fit flush.

TENON PLATES. With the mortise plates attached, the tenon plates can be added to the ends of the side rails. But because the rails are so long and because you're

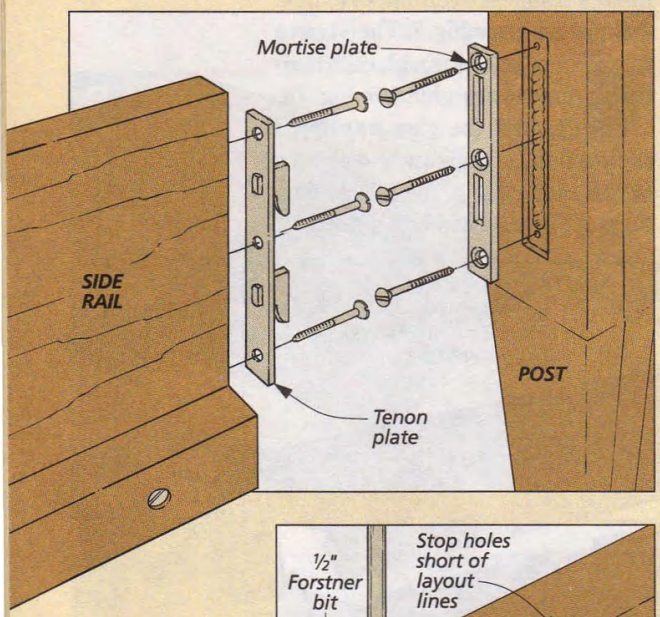

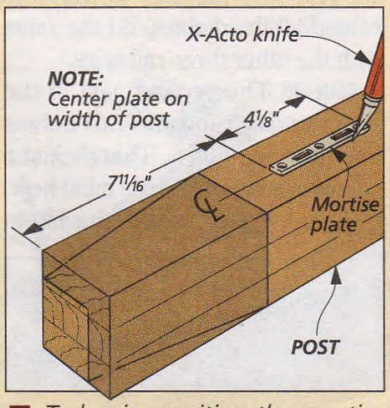

1 *To begin, position the mortise plate on the post and scribe around it with an X-Acto knife.*

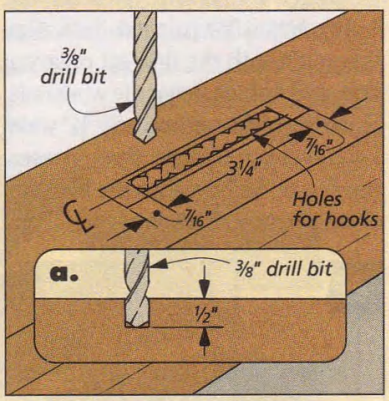

2 *Next, drill overlapping holes that will provide clearance for the hooks on the tenon plate.*

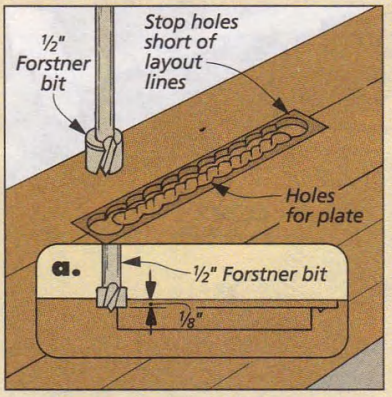

3 *To set the plate flush with the post's surface, drill another, larger set of overlapping holes.*

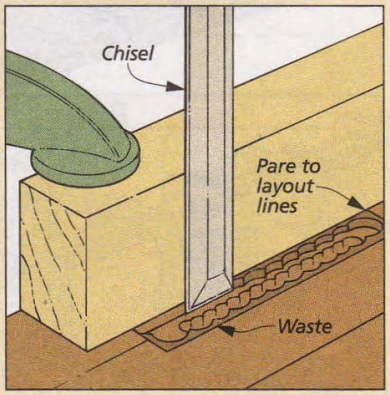

4 *Now clean up the second set of holes with a chisel, using a scrap piece as a straightedge.*

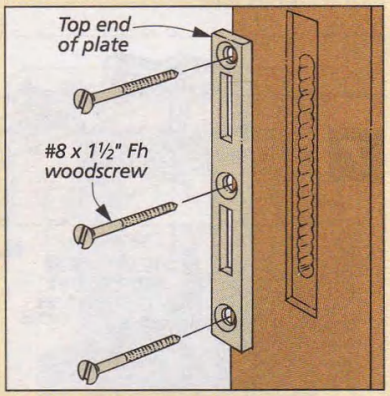

5 *When screwing the mortise plate into the post, be sure the mortises are oriented near the top.*

working with end grain, the procedure is a bit different.

The tenon plates have small "nubs" on their back faces where the hooks were stamped to the plate. So after laying out the position of the plate on the end of the rail (it's centered), I drilled two shallow clearance holes using a hand drill with a 3/8"-dia. bit, see Step 6.

Next, the plate needs to be mortised into the ends of the side rails. But since the side rails are over 6 feet long, I couldn't use the drill press to do it. Instead, I used a hand-held router with a straight bit, see Step 7.

To do this, I clamped the rail in my bench vise. And to provide more support for the router base, I clamped two scrap pieces to each face so they were flush with the end of the rail.

Then with the bit set 1/8" deep, I routed the mortise, stopping short of the layout lines an all sides. Now the mortise can be squared with a chisel, refer to Step 4.

CROSS DOWEL. At this point, you could attach the tenon plate to the rail. But since you're screwing into end grain, the screws won't have much holding power. So to give the screw threads some long grain to "bite" into, I added a 1/2"-dia. cross dowel to the rail, see Step 8.

All this dowel requires is drilling a deep hole in the *bottom* edge of the rail. (I used a work support similar to the one shown below.)

Once the dowel is glued in place, the tenon plate can be screwed to the end of the side rail, see Step 9.

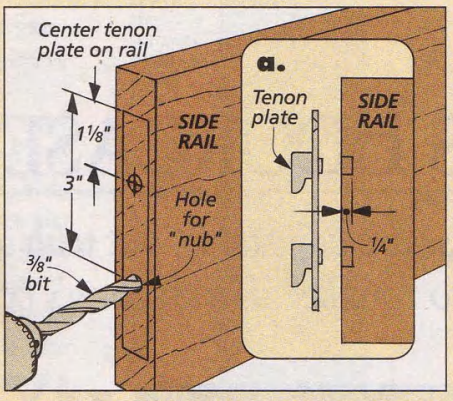

6 *After laying out the tenon plate on the end of the rail, drill two holes for the nubs on the back face of the plate.*

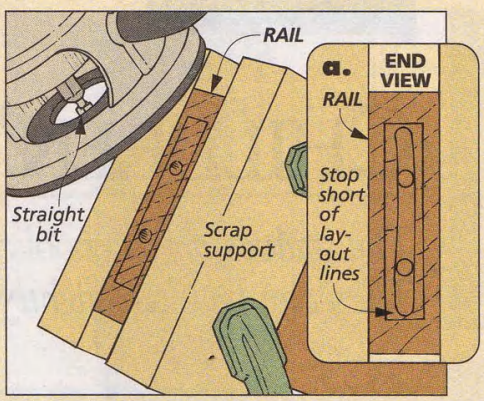

7 *Next, rough out the mortise for the plate with a router and a straight bit. Then clean up the sides as in Step 4.*

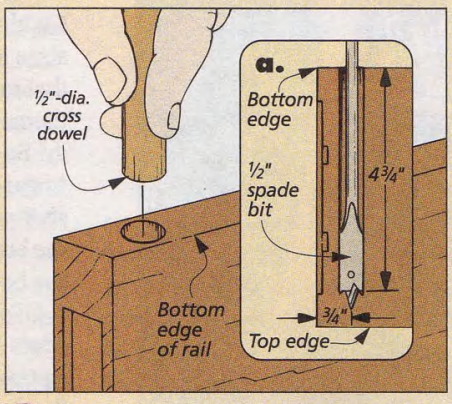

8 *To strengthen the holding power of the screws, I drilled a 1/2"-dia. hole under the rail and glued in a cross dowel.*

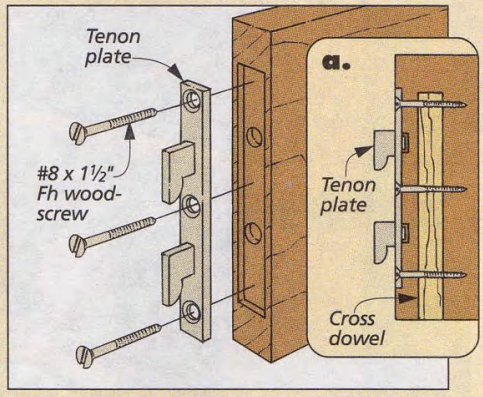

9 *With the dowel in place, the tenon can be screwed to the rail. Then the rail can be hooked onto the post.*

Cutting Tenons on Long Rails

Like many pieces on the bed, the length of the upper and lower rails made them a challenge to work with, especially when cutting their tenons.

So I created an "outrigger" to support the ends of the pieces, see Figs. 1 and 1a. I clamped a long board to a saw horse so it matched the height of my saw's table.

Then, I clamped a hold down to my miter gauge fence. This hold down is positioned just above the rail and prevents the workpiece from tipping up.

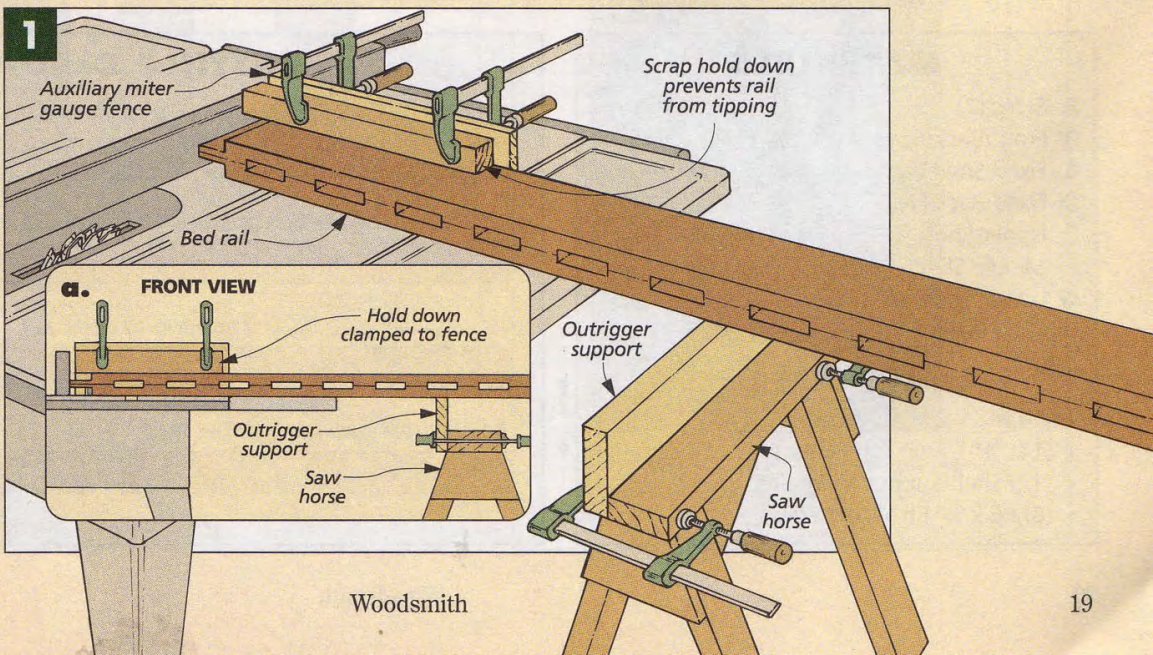

CHILDREN'S BOOKCASE

The shelves on this bookcase are adjustable, but with a little different twist. They can be tilted slightly to "cradle" thin children's books.

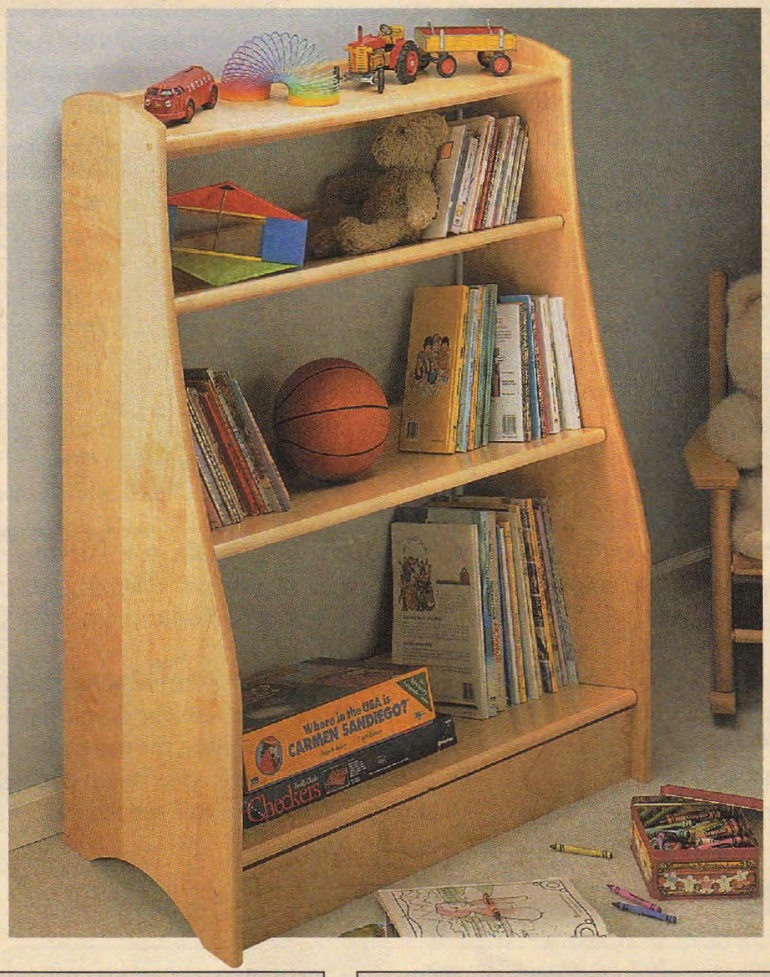

What makes this a bookcase for children are the shelves. They're designed to hold children's books. Children's books come in a variety of sizes just like adult books — except that most are too thin to stand up by themselves; they fall over pretty easily. So we designed shelves that tilt towards the back. This way, the shelves "cradle" the books along both the bottom and edge, and as a result, the books stand up better.

Of course, all the children's bookcases I've ever seen hold more than just books. There are always toys. So the shelves have been designed to be adjustable. They can be tilted to hold books or laid flat to hold toys. And in either position, they rest securely on L-shaped shelf supports.

SIDES

I began building the bookcase by gluing up two oversize panels for the **sides (A)**, see drawing on page 21. (I used ¾"-thick solid maple.) After the panels are sanded flat and smooth, I cut them to final width (16") but left

MATERIALS

A	Sides (2)	¾ x 16 - 44 rgh.
B	Front/Back Aprons (2)	¾ x 4¼ - 30½
C	Fixed Shelf (1)	¾ x 10 rgh. - 30½
D	Fixed Back (1)	¾ x 4¼ - 30½
E	Upper Shelf (1)	¾ x 7¾ - 30¼
F	Middle Shelf (1)	¾ x 11⅜ - 30¼
G	Lower Shelf (1)	¾ x 13½ - 30¼
H	Shelf Backs (3)	¾ x 4¼ - 30¼

SUPPLIES

- (14) #8 x 2½" Fh Woodscrews
- (14) ⅜" Dome Top Plugs
- (12) Shelf Supports w/holes
- (6) #6 x ½" Rh Woodscrews

CUTTING DIAGRAM

¾" x 5½" - 96" Hard Maple (2 Boards @ 3.7 Bd. Ft. ea.)

¾" x 5½" - 96" Hard Maple (3 Boards @ 3.7 Bd. Ft. ea.)

¾" x 5½" - 96" Hard Maple (2 Boards @ 3.7 Bd. Ft. ea.)

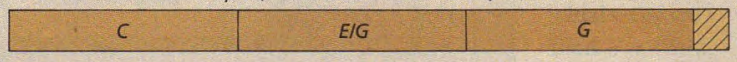

¾" x 5½" - 96" Hard Maple (3.7 Bd. Ft.)

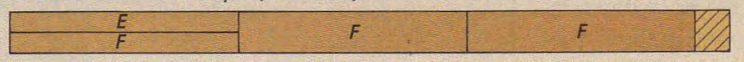

them slightly long (44"). (This extra length makes it easier to cut the curve along the top edge.)

LAYOUT CURVES. Now that you have squared-up panels, the next step is to lay out the curves on the sides. This is easy to do and doesn't require any artistic skill. And you can do it right on the panels or make a template.

First, draw a 1" grid, see pattern below. With the grid complete, the curve can be drawn one square at a time. It's a lot like drawing dot-to-dot.

DRILL HOLES. Next, while the side panels were still square, I decided to drill a couple sets of holes.

The first set of holes are for securing the top shelf and aprons that connect the sides later. Since these are drilled all the way through the panels, I laid them out on the *outside* face of each side, see drawing and detail 'a'.

The next set of holes holds the shelf supports. These 1/4"-dia. holes are only 3/8" deep and are laid out and drilled on the *inside* face of the panels, see drawing and detail 'b'.

To make the shelves adjustable, the panels get three holes for each shelf: one in front and two in back. What's odd here is that the two top holes for each shelf don't line up. The upper hole in back (the one used when the shelf is flat) is 1/8" lower than the hole in front. That's because I planned to hide the front shelf support in a shallow groove under the shelf. But more on this later.

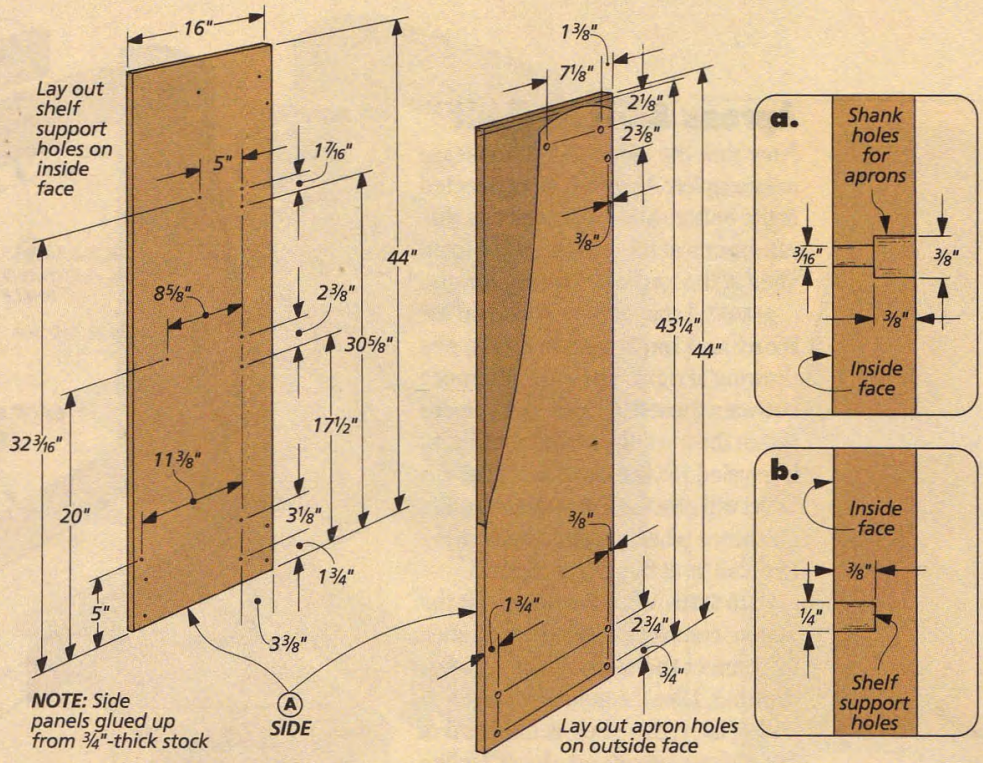

SHAPE SIDES. Once both sets of holes are drilled, I shaped the curves on the panels in three steps. First, I roughed out the curves on the band saw, staying about 1/16" from the layout lines, see Fig. 1. Then I sanded them smooth with a drum sander on the drill press, see Fig. 2.

And finally, I routed a bullnose profile with a hand-held router on the front edge and along the top, see Fig. 3. To do this, I used a 1/2" round-over bit set to make a 5/16"-deep cut, see Fig. 3a. This will leave a tiny flat area down the center of each edge, but a few passes with sandpaper will easily smooth over the bullnose profile.

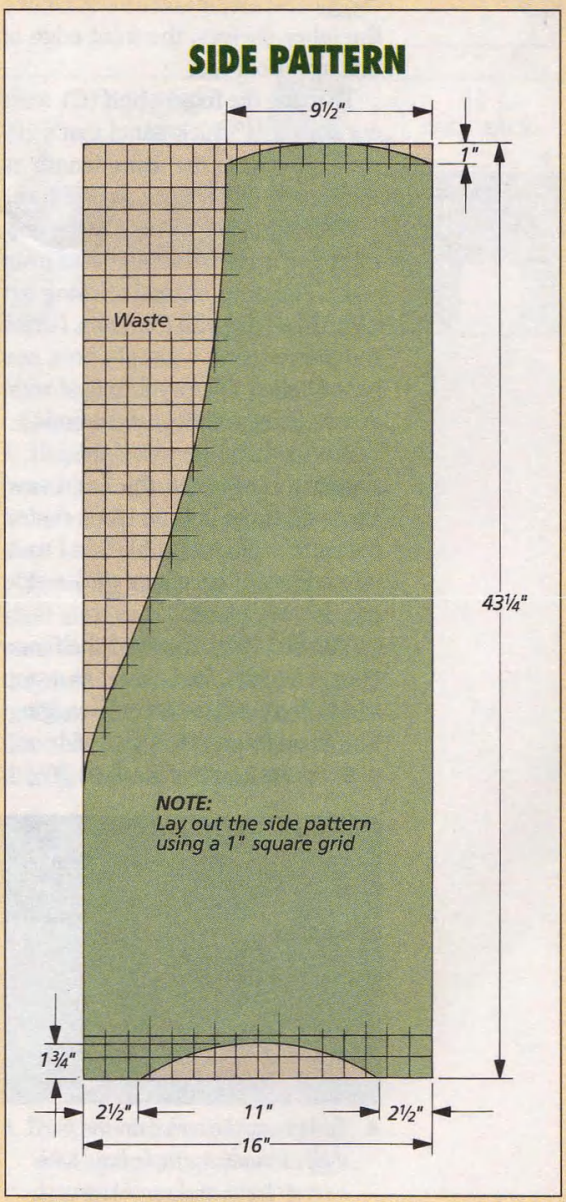

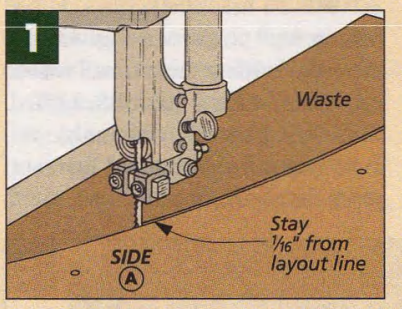

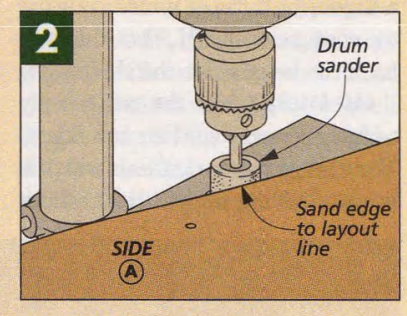

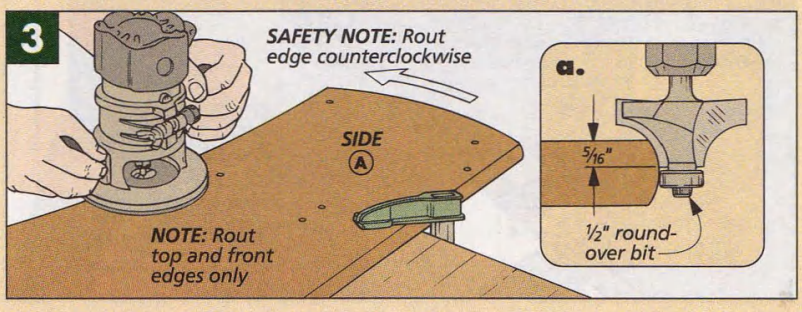

Aprons & Fixed Shelf

Now that the sides of the bookcase are complete, they can be connected at the bottom and top. I used two simple aprons at the bottom and a fixed shelf at the top, see drawing at right.

APRONS. I started by working on the **front** and **back aprons (B)**, see drawing at right. The only difference between these 4¼" wide (tall) pieces is that the top edge of the front apron is beveled 15°, see detail 'a'. Later, this bevel will give the lower shelf enough clearance when it's tilted back, refer to detail 'a' at the top of page 23.

FIXED SHELF. With the aprons at the bottom complete, I added a fixed shelf to connect the sides at the top, see drawing. Like the adjustable shelves added later, this shelf is made up of two pieces: a shelf and a back. Unlike the other shelves, the front edge of this one is curved.

To make the **fixed shelf (C)**, start out with a ¾"-thick panel that's 10" wide and cut to the same length as the aprons (30½"), see drawing.

Once the panel is glued up, the only thing you need to do is shape its front edge. This time, instead of laying out a grid like I did with the sides, I drew the curve using a simple bow, see photo below. (The shelf is 9¾" wide at the center and 8¾" at the ends.)

When the curve is laid out, I roughed it out with the band saw, sanded it to the line, and then routed the same bullnose profile that I routed earlier on the edges of the side panels, see detail 'b'.

FIXED BACK. With the fixed shelf complete, I added a back to act as a stop and to prevent the shelf from sagging. The **fixed back (D)** is 4¼" wide and matches the length of the shelf (30½").

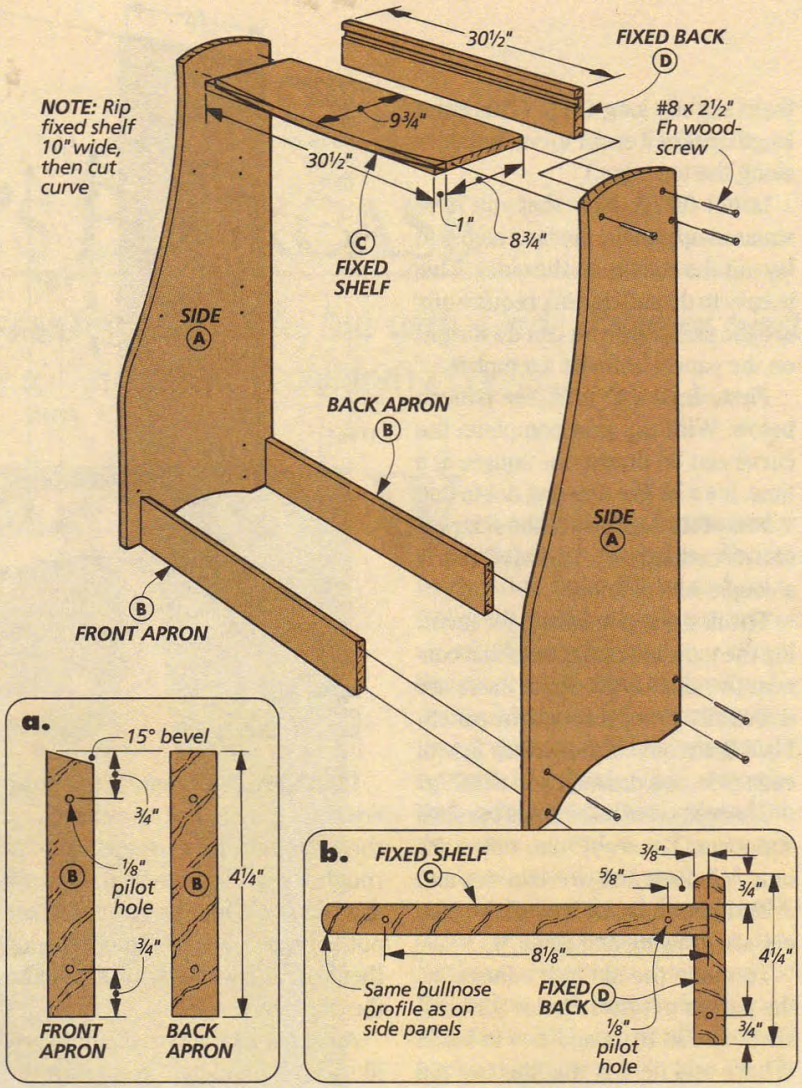

The first bit of work to do on the back is cut a groove for attaching it to the fixed shelf, see detail 'b' above. This groove is ⅜" deep and is located ¾" down from the back's top edge.

After the groove is cut, all that's left is to rout the bullnose profile along the top edge, see detail 'b'. Then the fixed back can be glued to the shelf.

CASE ASSEMBLY. Now the case is ready to be screwed together, see Fig. 4. The easiest way to do this is with the bookcase lying on its back — both the fixed shelf and the back apron are flush with the backs of the sides. The tricky part is holding the front apron in position. To do this, I cut two spacers (13⅛" long) and stood them up at the sides of the case, see Fig. 4.

PLUGS. To hide the screws, I used "dome top" plugs, see Fig. 4a. But instead of adding them now, I waited until after the finish had been applied. This way, I could disassemble the case when finishing and lay each piece flat on the bench.

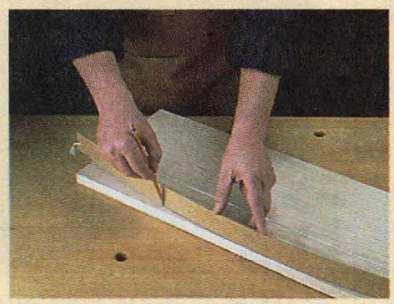

▲ *To lay out the curve on the fixed shelf, I made a simple bow with a scrap piece and some string.*

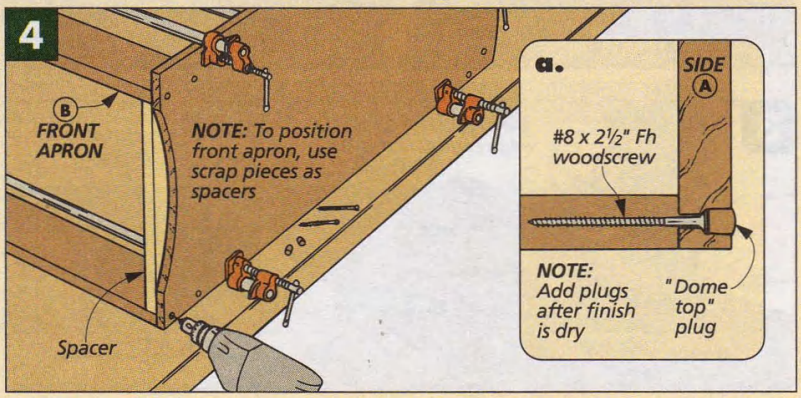

Adjustable Shelves

All that's left now is to add the three adjustable shelves, see drawing at right. Except for their widths, they're all identical. And like the fixed shelf on top, each adjustable shelf has a back to prevent it from sagging.

But the backs on the adjustable shelves extend higher than the back on the fixed shelf, see detail 'a' at right. This way, the books won't fall out when the shelves are tilted.

SHELVES. To make the **upper (E), middle (F),** and **lower shelves (G),** I started by gluing up three ¾"-thick panels and then ripped each to finished width, see drawing. Then to allow room for the L-shaped shelf supports, I cut the shelves ¼" shorter than the opening of the case, refer to Fig. 5a. (My shelves were 30¼" long.)

Each shelf rests on four supports. But in the front of each shelf, I cut a shallow groove in the bottom face just wide enough (½") to hold the supports, see detail 'b'.

Now to complete the shelves, rout each front edge with the same bullnose profile, see detail 'c'.

SHELF BACKS. With the shelves complete, I cut the three **shelf backs (H)** to size, see drawing. These pieces are all 4¼" wide (tall) and match the length of the shelves (30¼").

Next, to join the backs to the shelves, I cut a ⅜"-deep groove near the bottom edge of each back piece, see detail 'd'. Then before gluing the backs to the shelves, I routed the same bullnose profile on the top edge of each back, refer to detail 'a'.

FINISH. After the shelves and backs have been glued together, the bookcase can be finished. To do this, I unscrewed the case so I could lay each piece flat. Then I applied a few coats of a wipe-on finish.

Once the last coat of finish was dry, I screwed the case back together and plugged the screw holes, see Fig. 4a on page 22. (You'll want to finish the plugs first.) But to avoid tapping the plugs in too far, I used a simple depth gauge, see the photo below.

SECURE SHELVES. Finally, each shelf can be added to the case. To do this, simply insert the shelf supports and set the shelf on top, making sure the front support is "seated" in the groove under the front edge, see Fig. 5.

Then to make sure little hands can't knock a shelf loose when it's tilted, I screwed the front supports to each shelf, see Figs. 5 and 5a.

Screwing the front support to the shelf also makes it easier when you want to adjust the shelves later. Since the shelf now pivots in the front, all you'll need to do is raise the back of the shelf, reposition the support, and then drop the shelf back down.

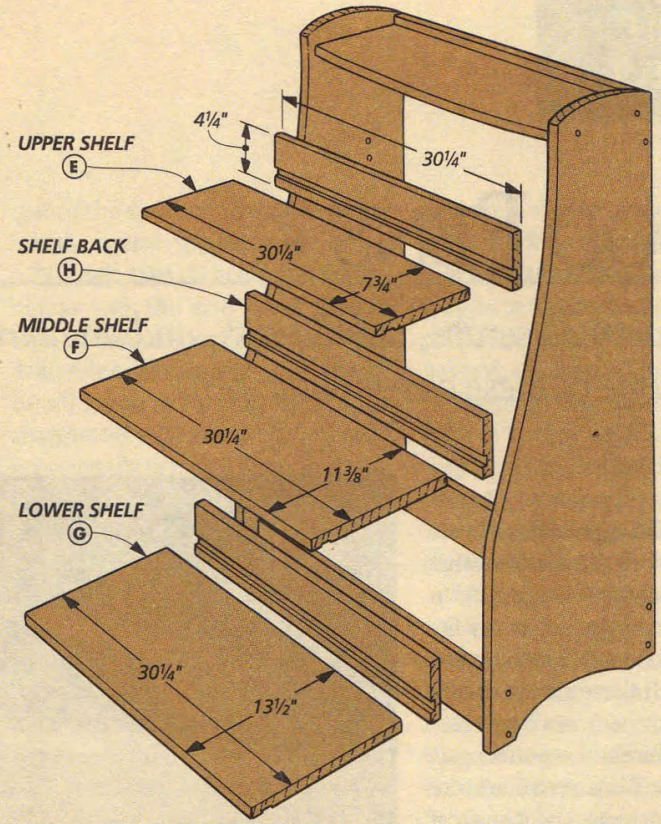

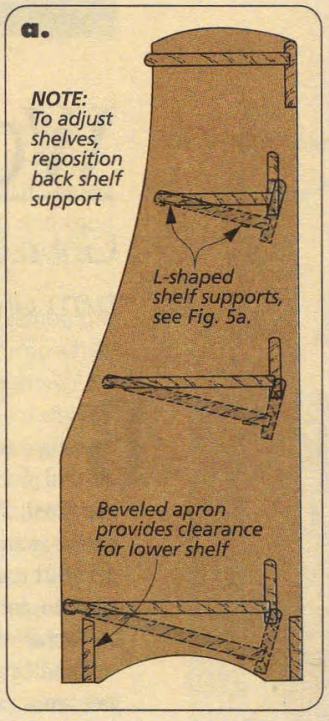

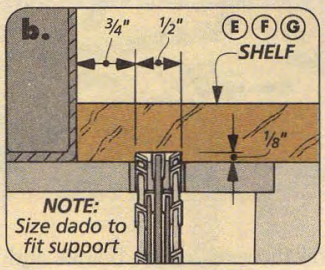

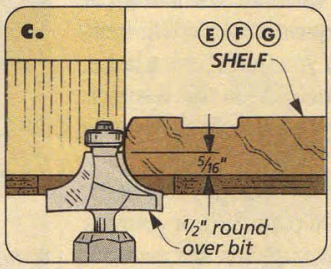

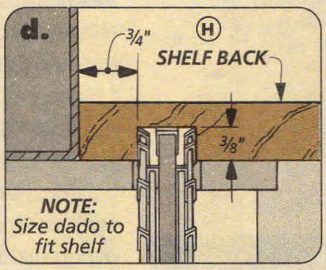

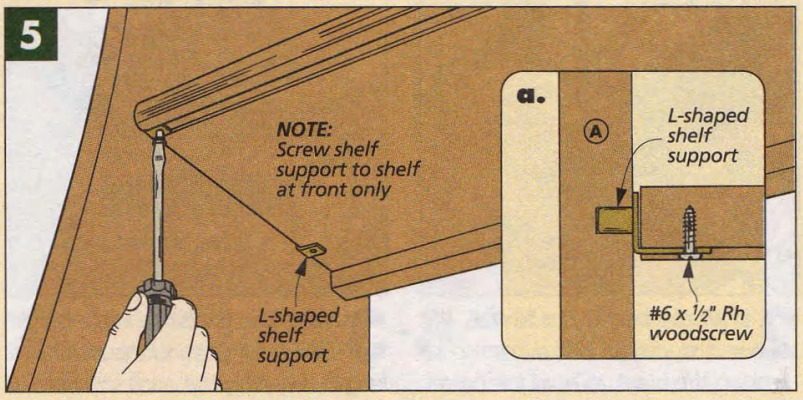

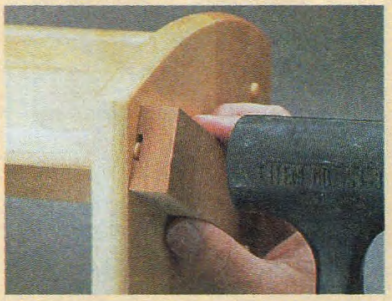

▲ *To insert the dome-shaped plugs, I used a piece of scrap with a 3/32"-deep dado cut in it.*

WOOD PENS

Got a few small scraps, a drill press, and an hour? That's all it takes to turn out one of these elegant little pens.

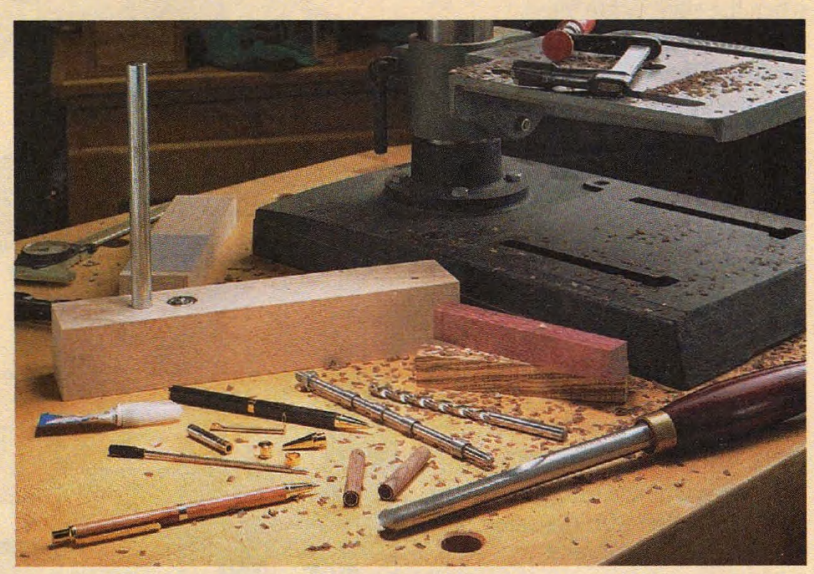

Being one who appreciates a beautiful piece of wood (no matter what the size), I'm always hanging on to scraps, some no bigger than my finger. But until recently, I didn't know what to do with these scraps except "squirrel" them away in a drawer.

Then I ran across the perfect project: wood pens. Wood pens don't take much time or material. And it's a great chance to try your hand at a little turning — even if you don't have a lathe. I turned all the pens in this issue on a drill press with a simple shop-made jig, see page 26.

Note: For a list of items you'll need, see the box on page 25. For sources of pen-making supplies, see page 35.

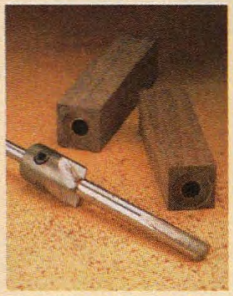

▲ *This barrel trimmer squares the ends of the blanks to the barrels, so the pen mechanism will fit together without any gaps.*

PREPARE BLANKS. The first task to making a pen is to prepare the blanks for turning, see Steps 1-3. This involves cutting the wood blanks to size and adding the brass barrels that will hold the pen mechanism.

SQUARE ENDS. There's nothing complicated here. But you do want to be careful when drilling the 7mm holes for the barrels. These holes are centered on the ends of the blanks and run their full lengths, see Step 2.

What's important is that the holes are square to the ends of the blanks. Otherwise, you'll end up with tiny gaps when the pen is put together.

SETUP. To get these holes as accurate as possible, I made a fence with a shallow dado cut in one face, see Step 2. This fence also speeds up the process somewhat. Once it's clamped in position, you won't have to worry about centering the bit for each blank.

DRILL BIT. But besides the fence, I also used a drill bit designed specifically to drill into end grain. (I didn't have a 7mm bit and needed to buy one anyway.) What's different about this bit is that the point is steeper and the flutes are wider to remove the chips more quickly.

SUPER GLUE. To glue in the barrels, I

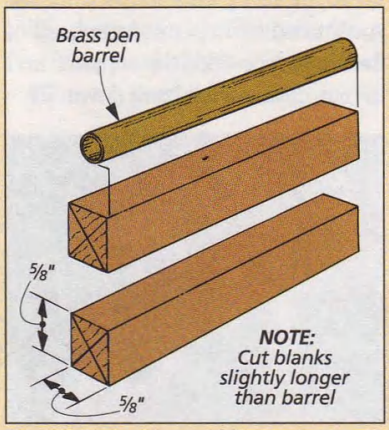

1 *To begin, cut two wood blanks slightly longer than the barrels. Then mark the centers on the ends.*

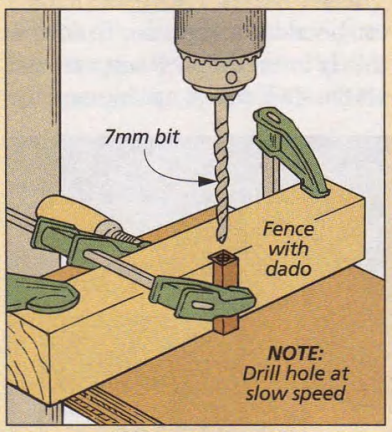

2 *With the blanks cut to size, the next step is to drill a 7mm hole through the blank to hold the barrel.*

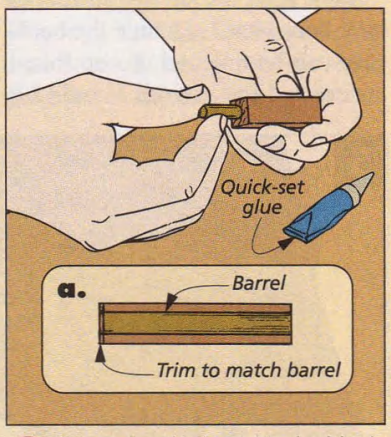

3 *Now, glue the barrel in the blank. Then trim or sand the blanks to length, keeping the ends square.*

applied quick-set glue to the barrels, see Step 3. But don't use the kind that sets up instantly — you need a little bit of time to push the barrel inside the blank so it's flush with one end.

BARREL TRIMMER. If you don't mind spending a little more money, a barrel trimmer does a neater job than sandpaper when it comes to squaring up the ends of the blanks, see margin photo on page 24. This trimmer has a shaft that fits inside the barrel after it's glued in place, see Step 3. As you twist it, the cutters scrape the end of the blank square to the barrel.

TURN BLANKS. After the blanks are trimmed to the right length, it's time to turn the blanks down to size, see Steps 4-6. (I used a spindle gouge.) The blanks are mounted on a steel mandrel with three bushings that match the finished diameter of the pen tip, center ring, and cap.

STRAIGHT SIDES. Since I turned the blanks with the drill press, they're held upright rather than horizontal. With this orientation, it's a little tricky to tell if you're turning the blanks straight. So you have to tilt your head occasionally to check your progress.

The goal here is to rough out the blanks until there's a slight shoulder at the bushings, see detail 'a' in Step 5. The sides should be straight or bowed out just slightly.

SANDING BOARD. Now to keep the blanks straight while reducing them to their final diameter, I used 150-grit sandpaper mounted to a board, see Step 6. Then when the blanks were close to final size (I used a calipers to check my progress), I set the board aside and did the finish sanding by hand, working my way up to 600-grit.

FINISH & ADD MECHANISM. All that's left now is to apply the finish and then press the pen mechanism into the barrels, see Steps 7 and 8.

The nice thing about finishing the blanks is that you can do it while they're turning on the drill press. And though you can apply almost any finish, there are special waxes and turning finishes available.

When you add the mechanism, the blanks can be oriented in any direction. And you may find that one end of each blank is just a hair larger than the other. I used my calipers to find the end closest in diameter to the center ring. This produces the smoothest fit, since the center ring is the part of the pen you feel the most. W

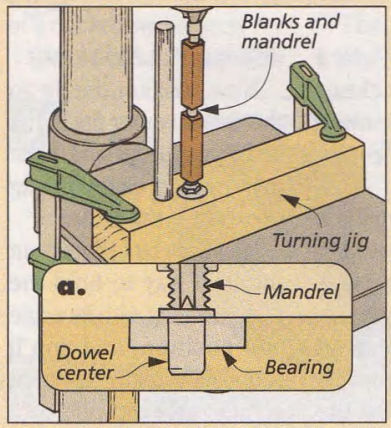

4 *With the blanks secured to the mandrel (see margin) mount it to the drill press and turning jig.*

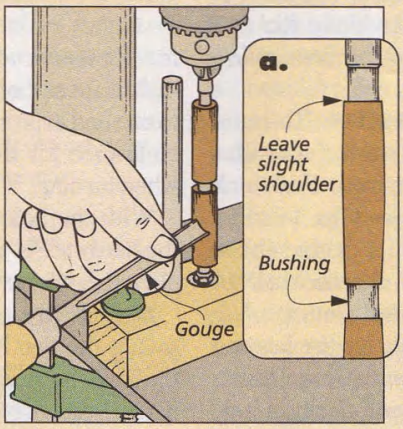

5 *Next, turn the blanks slightly larger than the bushings. Blanks can be straight or bowed slightly, see detail.*

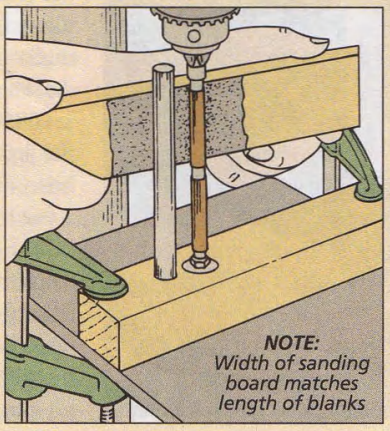

6 *Now the final shaping can be done with 150-grit sandpaper mounted to a board.*

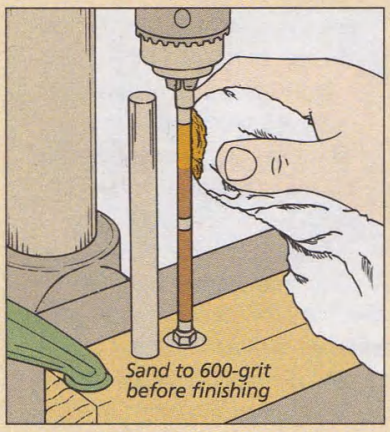

7 *Set the sanding board aside and finish sand the blanks to 600-grit. Reduce the speed and apply a finish.*

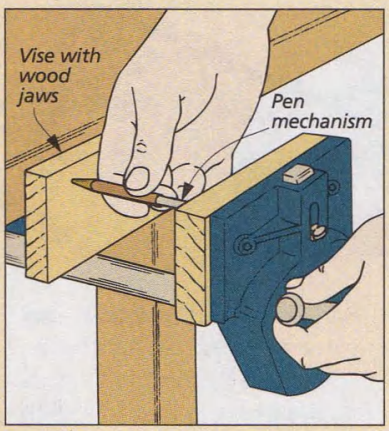

8 *To add the pen mechanism, use a wood vise, holding the pieces straight as they're pressed together.*

PEN SUPPLIES

- 5/8" x 5/8" - 5" (rgh.) Wood Blank
- Pen Mechanism Kit
- 7mm Twist or Brad Point Drill Bit
- Quick-set or Instant Glue
- Turning Jig (see page 26) or Lathe*
- Mandrel w/Bushings*
- Spindle Gouge
- Vise with Wood Jaws
- Barrel Trimmer (Optional)

* To turn pens with a lathe, you'll need a live center and a mandrel with a Morse taper.

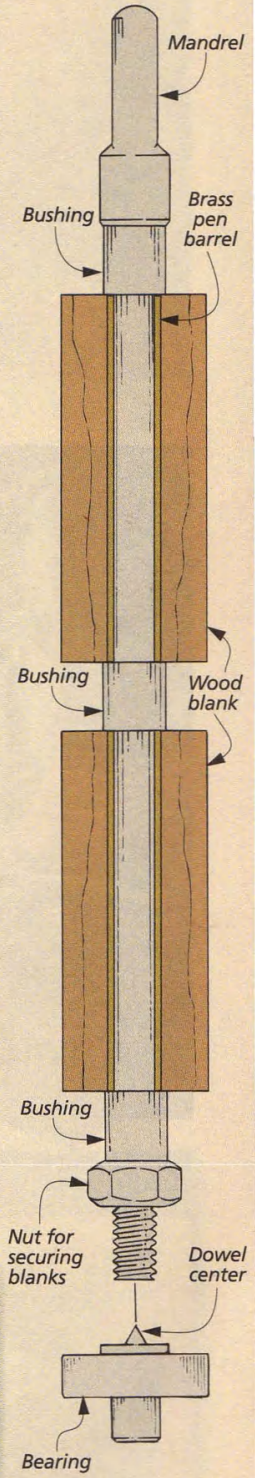

TALKING SHOP

Turning Jig

The guys in the shop looked a bit puzzled when I showed up with this turning jig, see photo. But this bare-bones jig really does the job. In fact, after seeing it work, they all got busy making plans to turn some pens of their own.

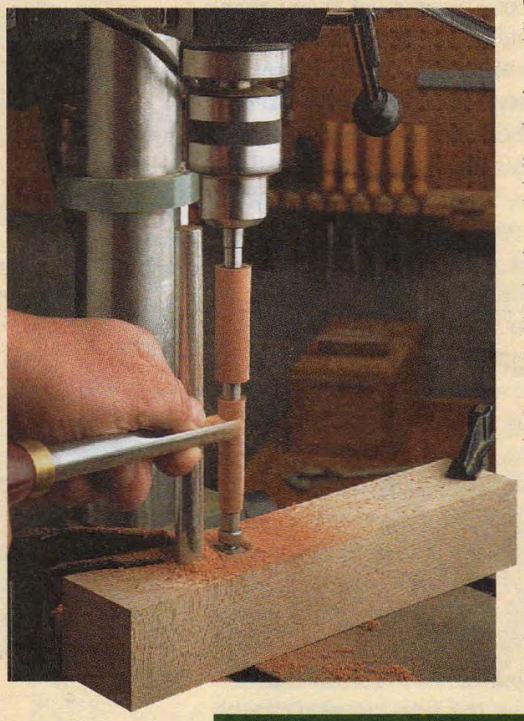

HOW IT WORKS. The secret to this jig is the "live center" that holds the mandrel. This is simply a common 1/4"-dia. dowel center that sits in a bearing, see Fig. 1.

As the drill press spins the mandrel, the dowel center helps keep the mandrel straight, without creating a lot of friction.

And to support and guide the gouge as the wood is turned, I added a tool rest made from a piece of 1/2"-dia. steel rod.

CONSTRUCTION. To build the jig, I started out with a base cut from 1 3/4"-thick stock, see Figs. 1 and 1a.

Then I drilled three holes: a clearance hole for the dowel center, a 1/4"-deep hole for the bearing that allows the dowel center to spin, and finally, a hole for the steel rod. Note: I drilled these holes closer to one end to provide more clearance for the gouge when turning.

With the holes drilled, the hardware is pressed in place (I didn't use any glue).

JIG SETUP. To set up the jig, mount the pen blanks on the mandrel and chuck it in the drill press. (Set the drill speed at 2000 RPM.)

Now position the jig so the dowel center fits in the dimple on the tail end of the mandrel and clamp the jig securely to the table.

It'll take a bit to figure out the best way to hold the tool. Just play with its angle and position, and you'll soon find something you're comfortable with.

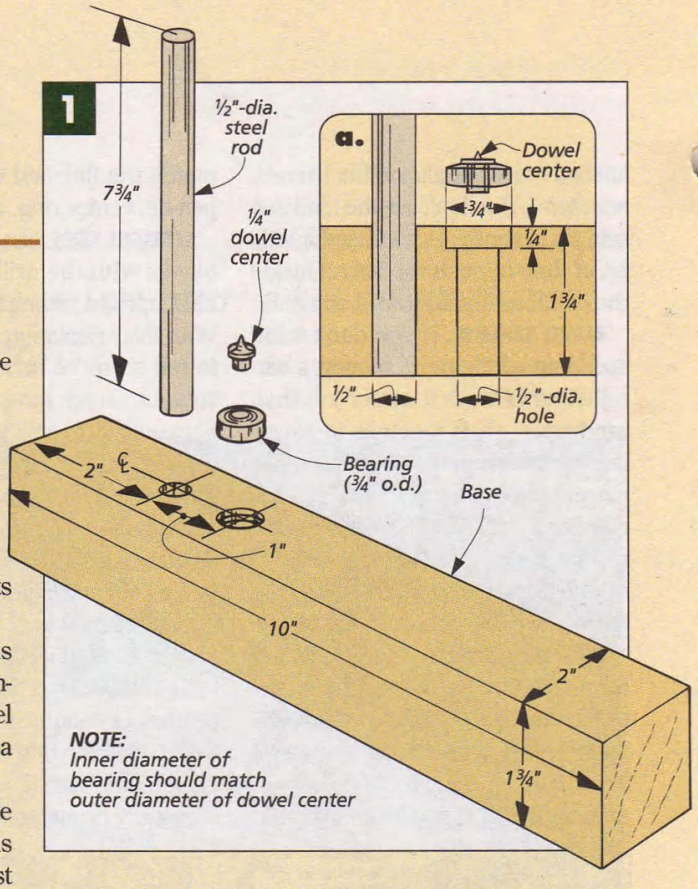

TOMPKINS TURNER

I'm a pushover when it comes to jigs. So when I saw this one for making pens on a router table, I just had to try it.

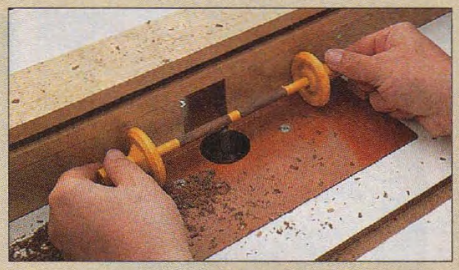

The Tompkins Turner is a turning mandrel on wheels, see photo. The mandrel is a rod threaded at each end. The bushings are plastic. And to secure the blanks and lift them off the table, there are a pair of wheels that screw onto each end of the rod.

The procedure is simple enough. The blanks are prepared just like you do when turning them. But the wood is removed by making multiple passes over a straight bit.

Each pass is made from right to left, and the jig is rotated slightly between passes. To make sure you don't run the jig into the bit, there are a couple stop blocks that are attached to the table.

Note: The instructions recommend using a 1/2" straight bit with a cutter across the end. (I used an ordinary straight bit, and it seemed to work fine.)

I had no problems with the Tompkins Turner and was surprised at how smooth the blanks ended up. Still, sanding and finishing are more work since the blanks aren't spinning. And I still think it's more fun to watch a pen take shape while turning, rather than routing.

Spokeshaves

While many hand tools have been replaced with modern versions that plug in, there's still no better way to smooth a long, curved, or irregular edge than with a spokeshave.

There's not really much to a spokeshave, see Fig 1. Basically, it's just a blade fitted into a small body with a couple of handles. The blade is held in place by a cap iron. A couple of adjusting screws are used to set the depth of the blade.

The key to the spokeshave is its bottom, or sole. The sole of a spokeshave is much smaller than that typically found on most hand planes. This allows it to ride smoothly over the irregularities in the surface of a curved workpiece.

The *shape* of the sole also has a lot to do with a spokeshave's ability to handle curves. For smoothing *convex* curves, a flat-soled shave works best. But for the *concave* arc on the bed rails (see page 11), I used a spokeshave with a curved sole, see photo.

SHAVINGS. As the name implies, spokeshaves are designed to lightly shave the wood, not hog off large pieces at a time. To do this, a spokeshave needs to be properly tuned and adjusted (see box below).

Using the adjusting screws, move the blade forward until it just barely peeks out from the throat opening. (I find it easier to do this by feeling the blade rather than looking at it.)

Then before you start using the spokeshave, make sure that your workpiece is firmly clamped to your bench or in a vise. This allows you to concentrate all your efforts on the spokeshave and not on trying to hold your workpiece.

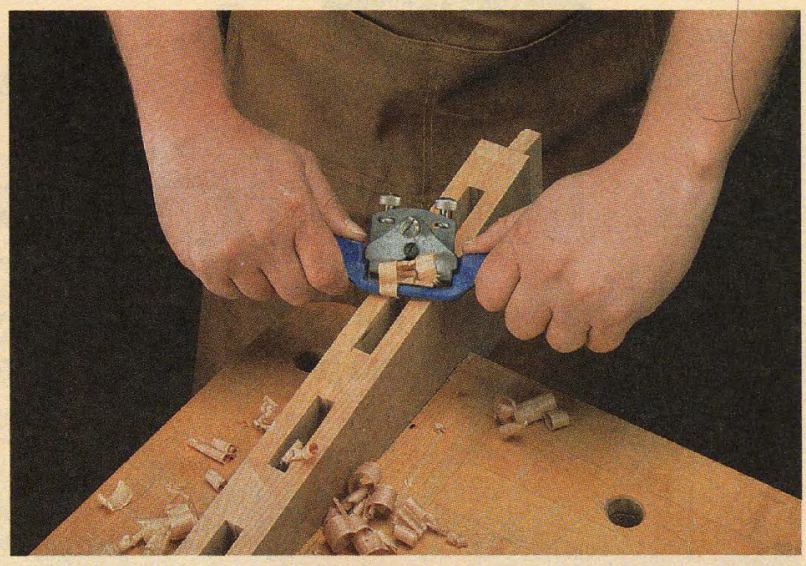

USING A SPOKESHAVE. A spokeshave can be used with either a push or pull stroke. I find that I have better control when pushing the tool. But whether you push or pull the shave, it's important to work in the direction of the grain to avoid tearout.

The secret to using a spokeshave is to hold it at the proper angle to produce a nice, clean cut. With a hand plane, the angle of the blade is fixed. But with a spokeshave, you control the angle by tilting the tool forward or backward.

Finding the right angle takes a little experimenting. As you push the spokeshave forward, try pivoting your wrists until the blade starts to take a crisp shaving off the wood. Pretty soon, you'll get a "feel" for how the blade cuts.

SKEW ANGLE. To make working with a spokeshave even easier, I hold the tool slightly cocked to one side, see photo above. This effectively lowers the cutting angle of the blade, allowing it to slice into the wood with less resistance.

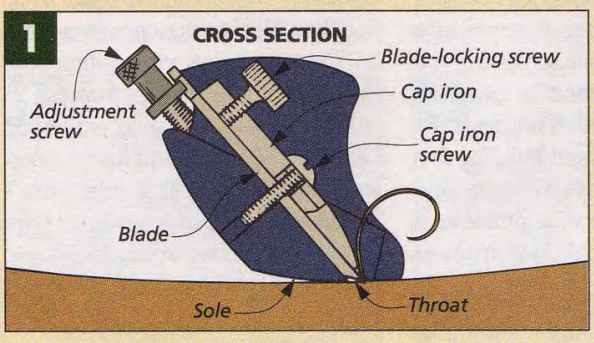

TUNING A SPOKESHAVE

File throat. *Like most hand tools, a brand new spokeshave needs to be tuned up before it can be used. Start by disassembling the spokeshave. Then use a small file to smooth the throat opening so the blade sits flat all the way across.*

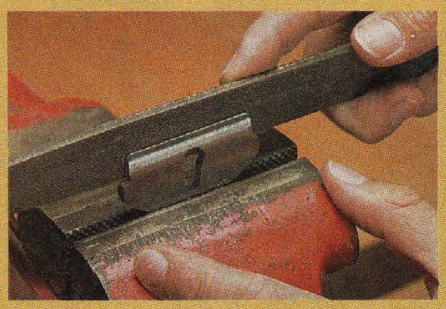

Flatten cap iron. *Next, flatten the underside of the cap iron so that it also contacts the blade along its entire width. This helps to ensure that the blade will be held firmly in place to eliminate "chatter" or skidding across the workpiece.*

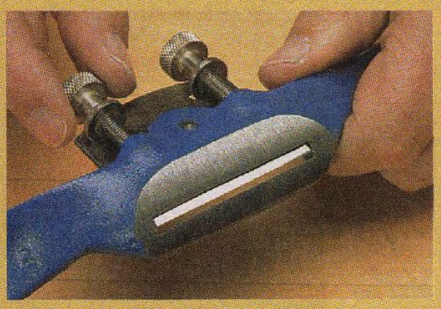

Adjust blade. *After reassembling the spokeshave, use the adjusting knobs to advance the blade until it just slightly protrudes from the throat opening. Check to make sure that the edge of the blade is parallel with the throat opening.*

MANTEL CLOCK

You expect a large project to attract a lot of attention. But sometimes, a small weekend project, like this mantel clock, can surprise you.

There's no doubt about it — what grabs your attention right away is the wood. It's curly maple. This figured wood is so dramatic that you might be inclined to think "the wood makes the clock." But while I appreciate the beauty of the curly maple, there are a couple other reasons why I like this clock as much as I do.

DESIGN. First of all, there's the design. This mantel clock has a traditional look to it. Its clean lines and simple molding would look great no matter what wood you used.

CONSTRUCTION. The other reason I like this clock isn't easy to see. In fact, you might miss it altogether, if you weren't looking for it. In spite of its elegance, there's nothing very difficult about building this clock. Everything is held together with simple joinery, and it houses a quartz movement, which is readily available and easy to install. (For sources, see page 35.)

CLOCK BODY

The body of this clock is quite simple. It starts out as an H-shaped frame that's sandwiched between a layer of molding and a top and bottom.

SIDES. I began work on the body by cutting the two **sides (A)** to size from ½"-thick stock, see drawing below.

With the sides cut, next I cut a ⅜"-wide groove ¼" deep in each side. Then I glued two ½" x ⅜" **stops (B)** in each groove, see drawing and detail 'a' below. The lower stop is for a drawer. The upper stop will position both the clock face and a face frame.

Note that there's a ½"-wide gap between the upper and lower stops, see detail 'b'. This is for a divider that's added later, refer to drawing on page 29. (One easy way to create this gap is to use a ½"-thick scrap piece as a

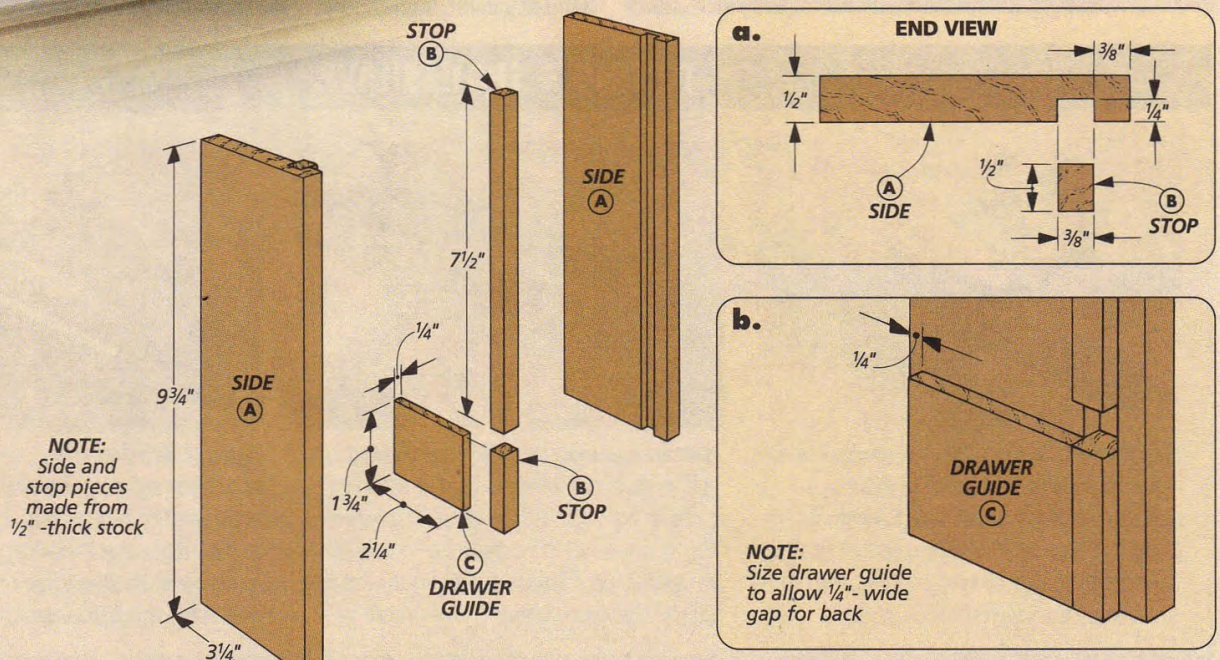

temporary spacer between the stops.)

To complete the sides, the last step is to glue a **drawer guide (C)** behind each lower stop, see detail 'b' on page 28. These guides fit flush with the outside face of the lower stop and should stop 1/4" short of the back edges of the sides to allow for a plywood back.

DIVIDERS. Next, to create the H-shaped frame, I connected the two sides with a **divider (D)**, see drawing at right. This piece is sized so it's flush with the sides in front and the drawer guides in back, see detail 'a' at right.

The trick to gluing the divider and sides is to keep the assembly square. So I used a spacer that matched the length of the divider, see Fig. 1.

TOP & BOTTOM. With these pieces assembled, I added a layer of molding to each end, see drawing above. And then added the top and bottom pieces.

First, I cut two **cove molding (E)** pieces to size from 3/4"-thick stock, see drawing. These pieces are cut to create a 1/8" lip at the sides and front. (Mine were 3 7/8" x 9 3/4".)

To shape the molding, I routed the ends and front with a 1/2" cove bit, see Fig. 2. Then I screwed them to the sides flush with the back, see Fig. 3.

Now with the cove molding in place, I added 1/2"-thick **top** and **bottom (F)** pieces, see drawing. These overhang the cove molding 1/8" on the front and sides, see Fig. 4a. But there is no profile routed on their edges. And since I didn't want screws showing, they're simply glued in place.

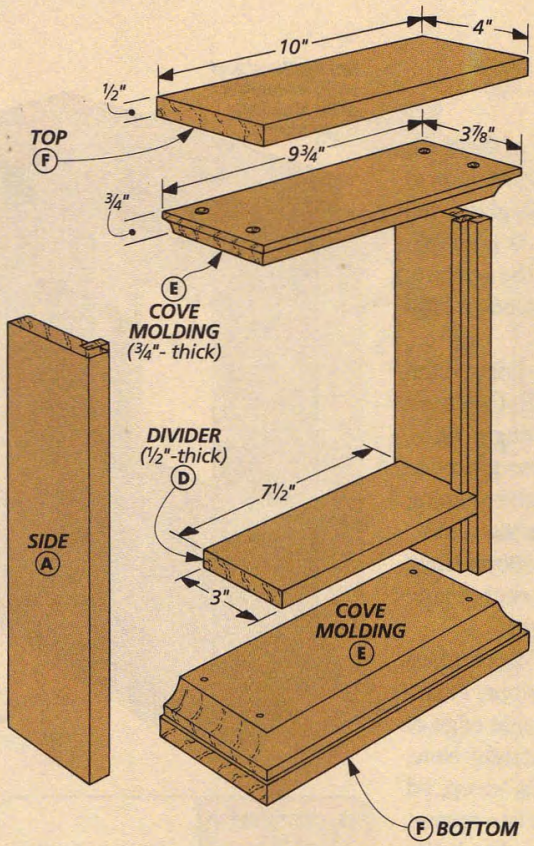

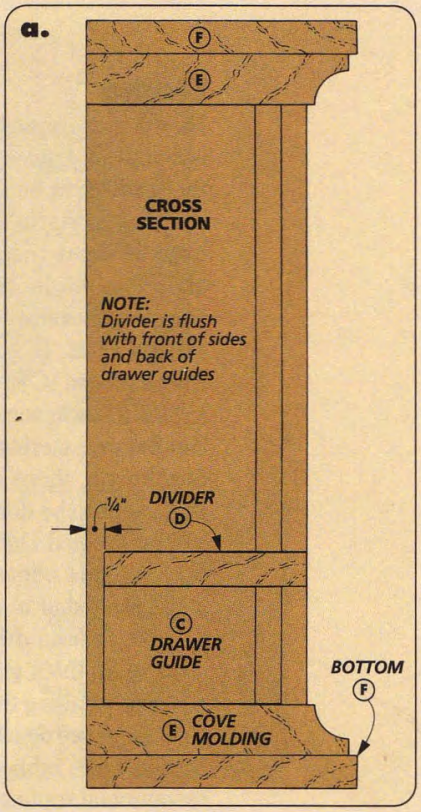

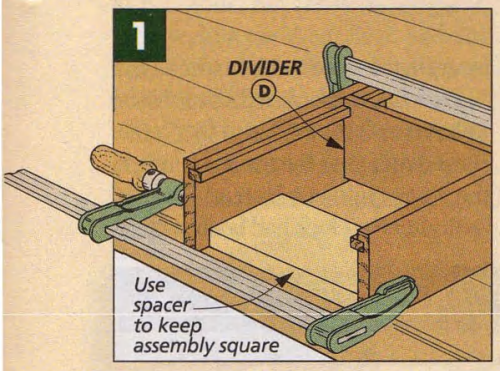

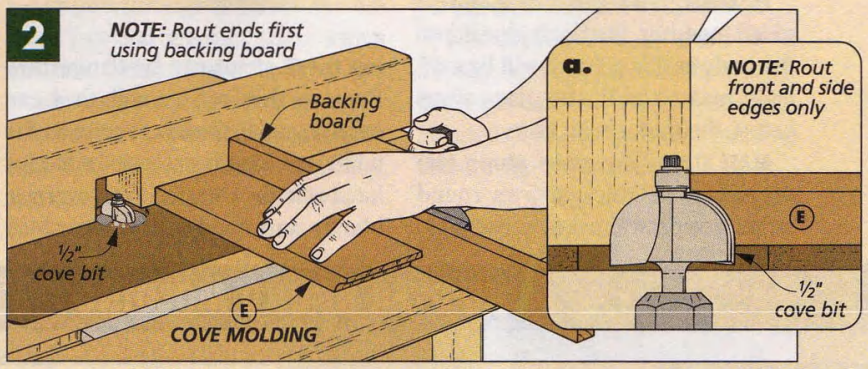

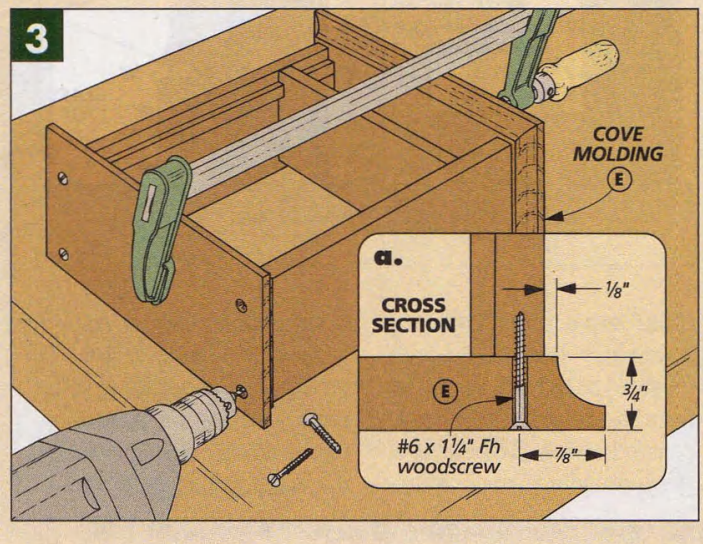

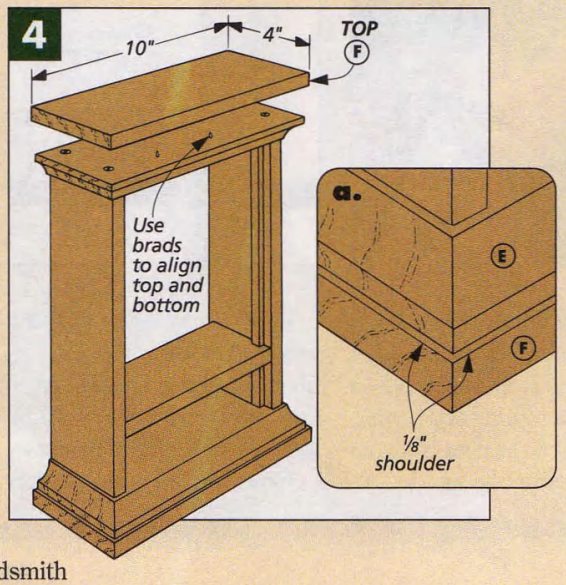

Frame

Now that the basic body of the clock is complete, I turned my attention to the frame that holds the glass, see drawing at right. This is a simple mitered frame that fits the opening above the divider and stands a little proud of the sides (1/8").

FRAME PIECES. To begin, I ripped the **frame pieces (G)** to width (7/8") from 1/2"-thick stock, see drawing at right. But before mitering these pieces to final length, there's a little shaping that needs to be done on the router.

First, I routed a 1/8" roundover along both outside edges of each frame piece, see detail 'a' at right.

Next, to hold the 1/8"-thick glass and the 1/4"-thick glass stops, I routed a rabbet along the inside edge of each piece, see detail 'b' at right. Note: Because this rabbet is 3/8"-deep, I'd recommend routing it in two passes.

When the rabbet is routed, the frame pieces can be mitered to size, see drawing. Here, you want a snug fit, so after mitering one end of each, I cut each piece to length so it fit the opening exactly.

ASSEMBLY. Now the frame can be glued together. But don't glue it into the body at this point. It will be easier to make and fit the glass stops before the frame is in place.

GLASS STOPS. The **glass stops (H)** are simply 1/4"-thick quarter round strips, see drawing above. But making these strips can be dangerous. Because they're so small, they can get hung up in the insert plate on the table saw, and there's potential for kickback. So I started with oversize blanks and used a zero clearance insert in the table saw, see box below.

With the stops routed, they can be mitered to fit the rabbet in the frame. But I didn't glue the frame or tack in the stops quite yet. Instead, I waited until after the clock had been stained.

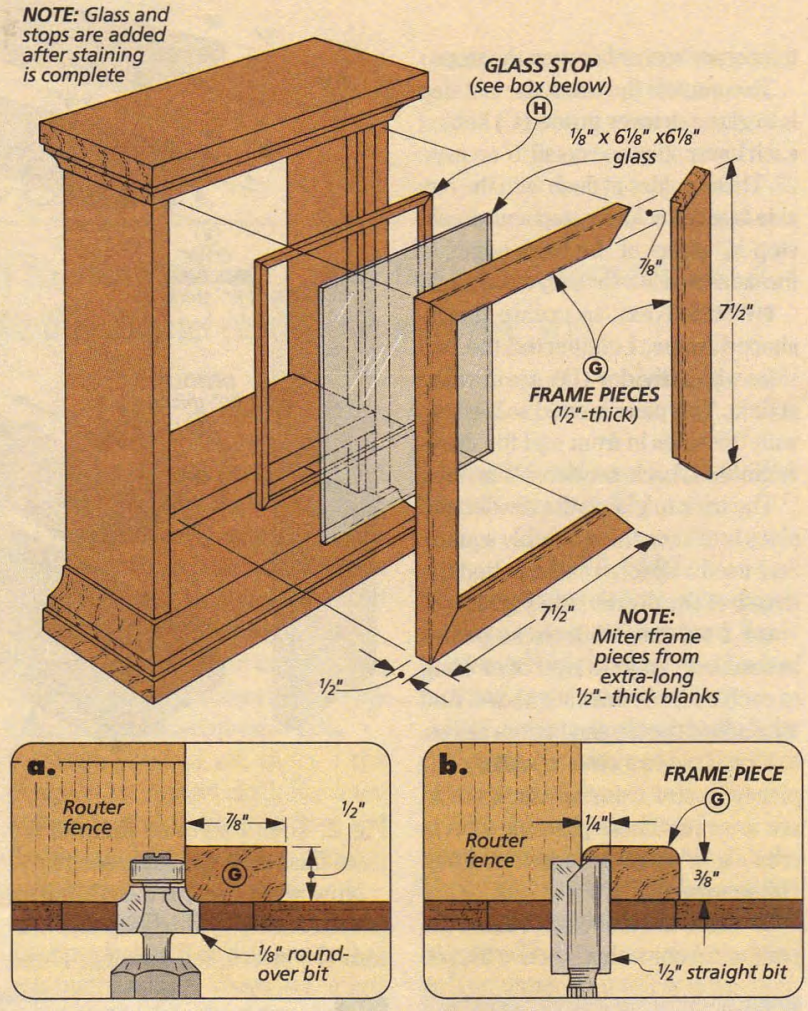

QUARTER ROUND MOLDING

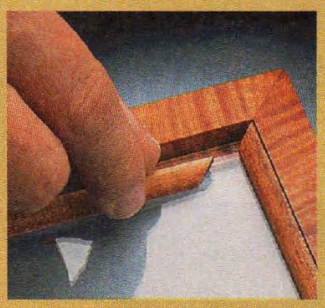

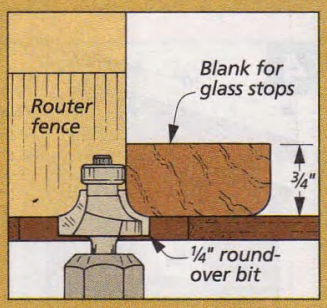

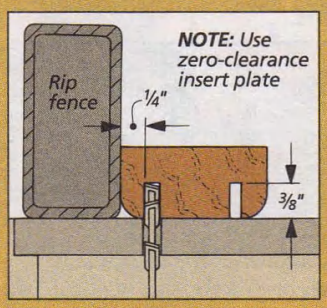

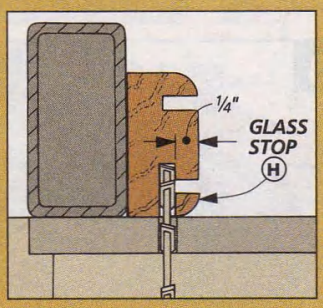

To hold a piece of glass in a frame, I often use small strips of quarter round, see photo above. But routing and ripping thin strips can be dangerous, so I use oversize blanks.

First, I cut a 3/4"-thick blank roughly 2" wide. Then to create the 1/4" round profile, I rout two edges with a 1/4" roundover bit, see left drawing above.

Now, cutting the quarter round strips from the blank is a simple, two-step procedure. First, 3/8"-deep kerfs are cut 1/4" from the rounded edges, see center drawing. (To be safe, be sure to use a zero-clearance insert plate in your table saw.)

Next, the blank can be stood on edge, and the molding strips can be cut away, see right drawing. Just make sure they fall to the waste side of the blade.

Movement Support

At this point, the body of the clock is almost complete. All that's left is to mount the movement and add a back.

MOVEMENT SUPPORT. To mount the movement, I took a slightly unusual approach. The clock face and quartz movement are attached to a movement support that simply slides in the opening in the back, see drawing.

This way, if you ever need to get at the hands in front, all you have to do is slide the movement support out through the back of the clock body.

FRONT. To make the movement support, I cut a **support front (I)** from ¼"-thick plywood, see Fig. 5. The size of this piece depends on the opening inside the clock. I cut my front to fit the opening exactly (7½" x 7½"), and then trimmed it slightly so it would slide in without too much trouble.

The only thing that needs to be done to this front piece is to drill a 5/16"-dia. hole in the center. This is for mounting the quartz movement, refer to detail 'a' above right.

SIDES. Next, I cut two **support sides (J)**, see Fig. 5. These match the height of the front. But more importantly, their widths put them flush with the back of the divider when the support is slid inside the clock. (Mine were 2" wide. But this may vary depending on the thickness of your clock face.)

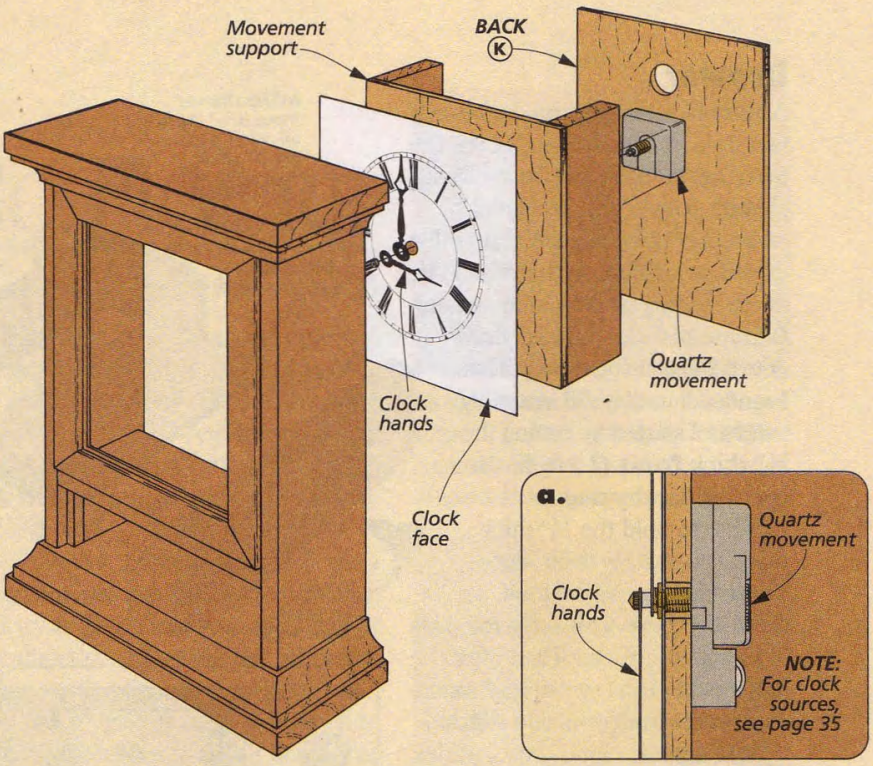

When the sides are glued to the front, the movement support is complete. But I waited to add the quartz movement until after the clock had been finished. At that point, adding the movement is just a matter of feeding its post through the front and the clock face and securing them with a nut, see detail 'a' above. Then the hands can be attached to the post.

BACK. The last piece that needs to be added to the clock body is a **back (K)**, see drawing below. This ¼"-thick plywood piece is cut to fit the opening in back. And to make it easy to remove, I drilled a small finger hole.

Then to hold the back in place, I used brass turn buttons that are screwed to the back of the sides.

To complete the body of the clock, all that's left to add are four ¾"-dia. felt pads, see drawing below. But again, I waited to do this until after building the drawer and finishing the clock.

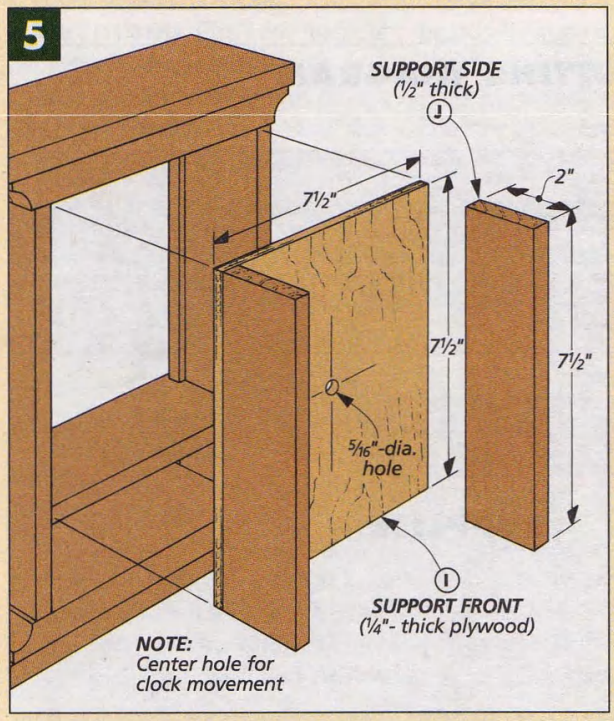

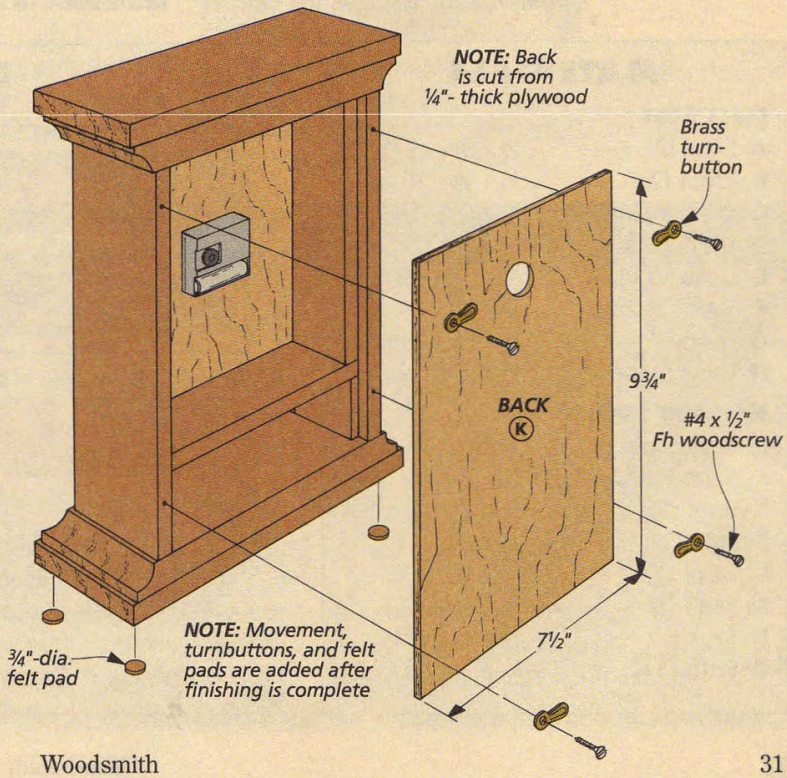

Drawer

At this point, the only thing left to add is a drawer, see drawing. Like the frame on the clock, this drawer stands slightly proud (1/8"), see detail 'b'.

Another thing to note is that this drawer is shallow, so there won't be much binding as it's slid in and out. Because of this, I built the drawer to fit the opening exactly. Then I sanded it until it slid smoothly.

FRONT. I started by cutting the 1/2"-thick **front (L)** to fit the opening, see drawing.

Next, to hold the 1/4"-thick sides, I cut two 1/4"-deep dadoes on the back face of the front, see detail 'a'. (These are inset so the sides fit inside the clock.) Then after the dadoes were cut, I routed a 1/8" roundover on the front's outside edges.

SIDES & BACK. Now, the 1/4"-thick **sides (M)** and **back (N)** can be cut to size, see drawing.

To hold a 1/4"-thick plywood bottom, I added a 1/8"-deep groove in all the pieces, see detail 'b'. But you don't want this groove visible on the ends of the drawer front, so to prevent this, rout a stopped groove between the dadoes, see detail 'c'.

Now the **bottom (O)** can be cut to size, and the drawer can be glued together. (The back simply butts between the sides, see detail 'a'.)

FINISH. Then to finish the clock, I highlighted the curly maple with a water-base aniline dye and applied a wipe-on finish, see page 35.

Now, all that's left to complete the drawer is to add a 1/2"-dia. brass knob to the front. W

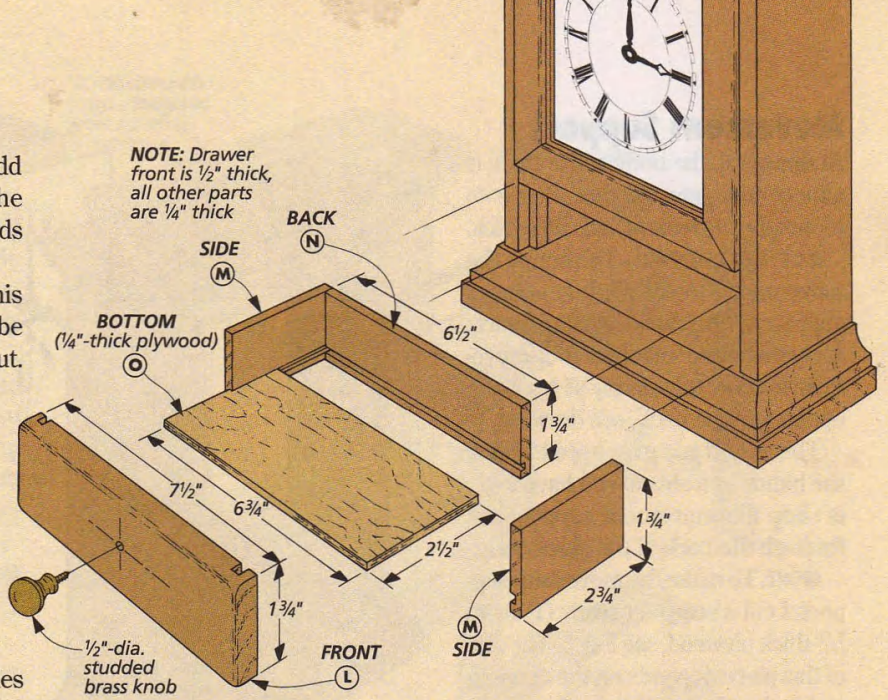

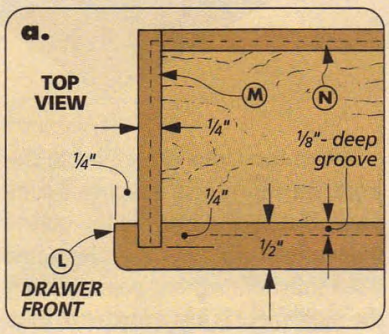

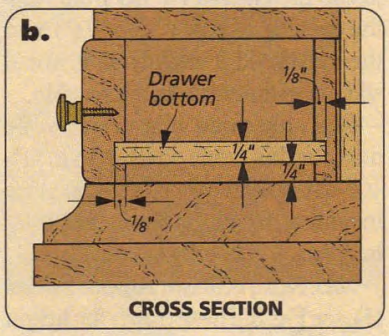

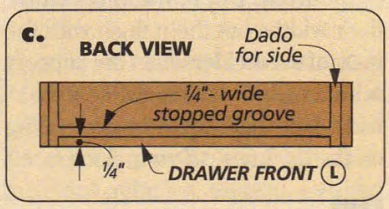

MATERIALS

CLOCK BODY		
A	Sides (2)	1/2 x 3 1/4 - 9 3/4
B	Stops (2)	1/2 x 3/8 - 10 rgh.
C	Drawer Guides (2)	1/4 x 2 1/4 -1 3/4
D	Divider (1)	1/2 x 3 - 7 1/2
E	Cove Molding (2)	3/4 x 3 7/8 - 9 3/4
F	Top/Bottom (2)	1/2 x 4 - 10
G	Frame Pieces (4)	1/2 x 7/8 - 8 rgh.
H	Glass Stops (2)	1/2 x 2 - 7 rgh.
MOVEMENT SUPPORT		
I	Support Front (1)	1/4 ply. - 7 1/2 x 7 1/2
J	Support Sides (2)	1/2 x 2 - 7 1/2
K	Back (1)	1/4 ply. - 7 1/2 x 9 3/4
DRAWER		
L	Front (1)	1/2 x 1 3/4 - 7 1/2
M	Sides (2)	1/4 x 1 3/4 - 2 3/4
N	Back (1)	1/4 x 1 3/4 - 6 1/2
O	Bottom (1)	1/4 ply. - 2 1/2 x 6 3/4

CUTTING DIAGRAM

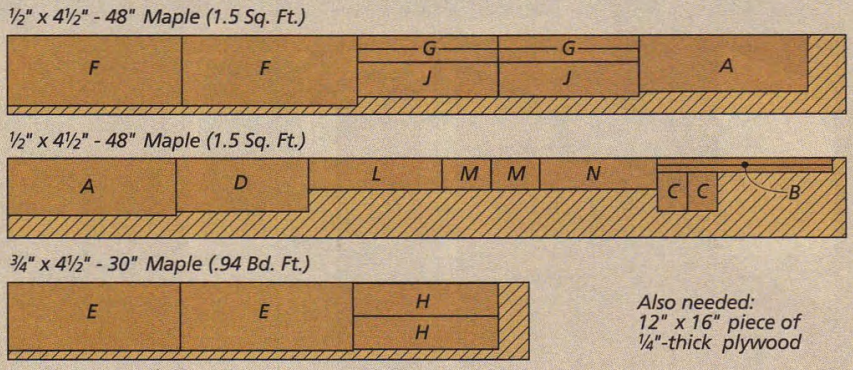

Also needed: 12" x 16" piece of 1/4"-thick plywood

SUPPLIES

- (8) #6 x 1 1/4" Fh Woodscrews
- (1) 1/8" Glass (6 1/8" x 6 1/8")
- (1) Quartz Clock Movement
- (1) 7 1/2" x 7 1/2" Clock Face
- (1 pr.) 2 3/4"-Long "Terry" Clock Hands
- (4) Brass Turnbuckles with Screws
- (1) 1/2"-dia. Studded Brass Knob
- (4) 3/4"-dia. Felt Pads

MAPLE – GO FIGURE

Maple is the hardwood with an alter ego. Most of the time, I use it because it's hard and durable. But there can be a dramatic side to maple, too. Sometimes, it has such striking figure that it can turn a fairly ordinary project into something special.

TYPES OF FIGURE. Figured maple occurs in several different species and is usually the result of some abnormal growth due to adverse conditions, (though the exact cause isn't always known for sure). This figure shows up in a variety of patterns and can be quite pronounced or rather subtle, see photos at right.

CURLY MAPLE. Curly maple, also called fiddleback or tiger-stripe, can occur near the bark of the tree in both hard and soft maples, see top photo. (We built the clock out of curly maple.) Here the ribbon-like figure forms tight, light and dark lines.

QUILTED MAPLE. Quilted maple occurs in big leaf maple and is similar to curly maple, see center photo. It has the same rippled satin look, but the figure is not so tight and regular.

BIRD'S EYE MAPLE. Bird's eye maple is altogether different than curly and quilted maples, see bottom photo. The figure consists of tiny "eyes" that pepper a board. These bird's eyes show up in the tree's annual rings and "grow" out from the center of the tree.

WORKING CHARACTERISTICS. Working with maple does require some special care. The biggest thing to keep in mind is that figured maple tends to chip out — especially the "eyes" of bird's eye maple. It's all that wavy grain. So if I need to do much planing, I try to find a local woodworking or cabinet shop that will rent me some time with a thickness sander.

Once you get the stock down to size, you're pretty much home free — until it comes time to finish the wood. Finishing figured maple isn't difficult, but it does require a little different approach, see box below.

SOURCES. By now, you're probably thinking you might like to work with some figured maple — if only you could get your hands on some.

The first place to go is your local woodworking store. They may not sell it but may know of a mill nearby that does. You might also ask a professional cabinetmaker.

Another option is to order some boards through the mail. This isn't as fun as picking it out yourself, but there are several sources around the country that carry figured woods. (I've listed some on page 35.) W

***Curly Maple**. Sometimes called tiger-stripe or fiddleback maple, this figure is created by the abnormal growth of maple's already wavy grain.*

***Quilted Maple**. This figure is also a result of wavy grain, but the patterns aren't as straight or consistent.*

***Bird's Eye Maple**. Unlike the wavy figures shown above, the "peppered" eyes of this figure are formed by small distortions in the annual rings.*

STAINING FIGURED MAPLE

If you've ever stained regular maple, then the first thing to know about figured maple is that it's a completely different ball game. With regular maple, you want an even stain, which is hard because maple's grain is so wavy. With figured maple, you want an *uneven* stain. This may sound disastrous, but the goal is to highlight the waves — not hide them. This increases the depth and contrast and brings out the figure, see photo above.

To stain figured maple, I use an aniline dye. (An off-the-shelf pigment stain tends to hide the figure.) And I typically choose water-based dyes because they're the easiest to work with and the most lightfast. For sources, see page 35. But the water will raise the grain. So I wet the wood and lightly sand off the whiskers before applying the stain.

Then when applying the stain, I keep a wet edge and avoid letting the dye drip over the sides. These dyes dry quickly and will leave lap marks.

Aniline dyes look great when they're wet, but flat and dull when dry. Don't worry. Applying a top coat will bring back the "wet", satin look you're after.

BISCUIT JIG

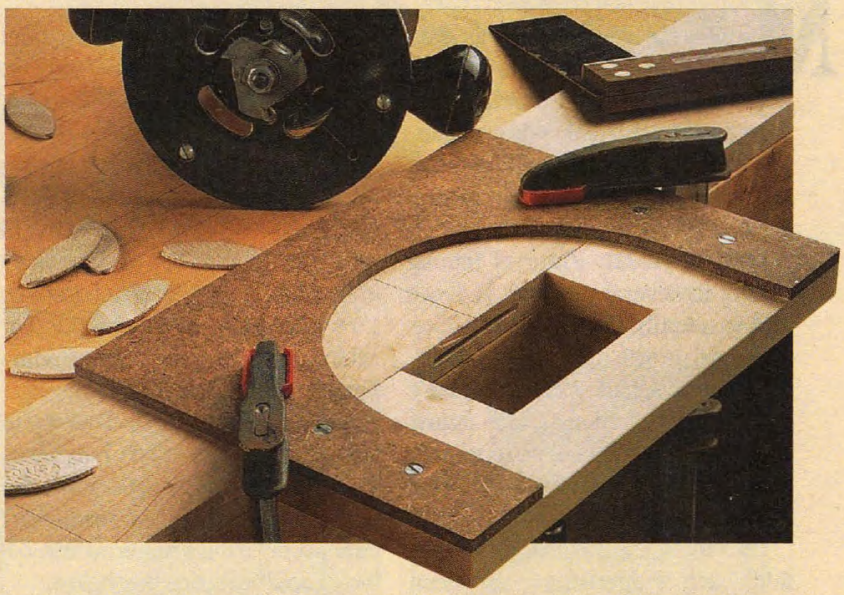

Biscuits are a great way to keep boards aligned when making glued-up panels. The problem is that not everyone has a biscuit joiner.

But a jig idea sent in by **Giles Lindstrom** of Tempe, Arizona allows you to cut biscuit slots with an ordinary router and a slot-cutting bit.

The jig consists of a 1/4"-thick hardboard template screwed to a hardwood base, see photo. There's a semicircle cutout in the template to guide your router in an arc. With a 5/32"-wide slot-cutting bit, you can cut a perfect slot for a #20 biscuit.

TEMPLATE. The template starts off as a 9" x 12" piece of 1/4"-thick hardboard.The size of the arc depends upon the size of your router base. To determine the arc radius, simply add 1 1/16" to the radius of your router base plate, see Fig. 1. Use a compass set to this measurement to lay out the arc. Then cut the arc out with a band saw and sand it smooth with a drum sander mounted in a drill press.

BASE. The base acts as a fence to position the jig against your workpiece. It's just a 4 1/2" x 12" piece of hardwood with a notch cut out to allow for the router bit. The template is then glued and screwed to the base, see Fig. 1.

The last step is to make a centerline index mark at the top of the semi-circle. This allows you to position the jig correctly on your workpiece.

To use the jig, line up the index mark with the desired center of your biscuit slot, clamp the jig to your workpiece, and rout the slot, see photo above.

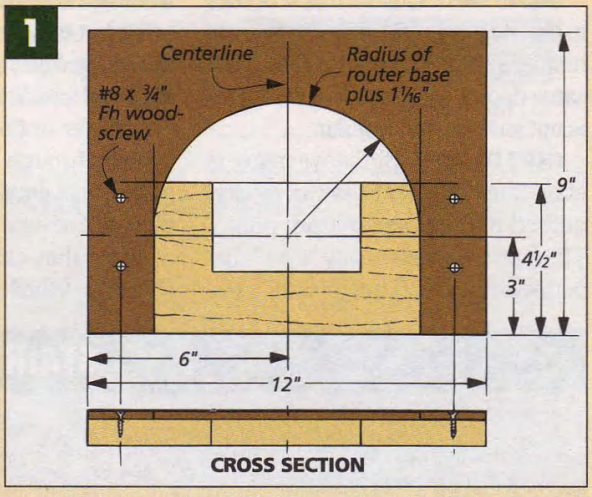

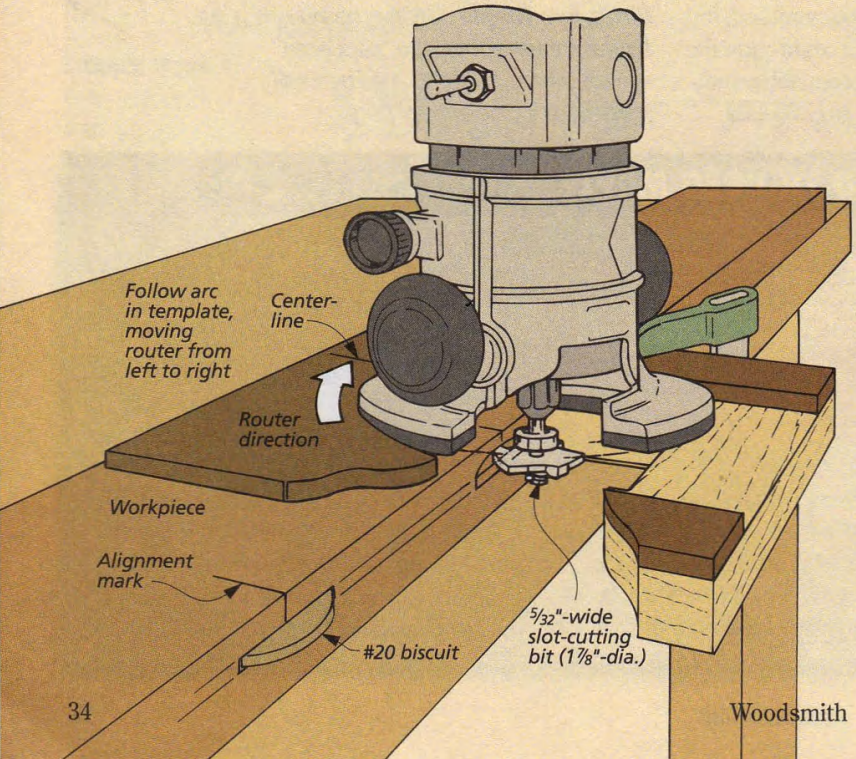

FEATURE YOUR JIG

If you've built an *original* jig and wish to see it featured on this page, send your idea to *Woodsmith*, Reader's Jig, 2200 Grand Avenue, Des Moines, IA 50312.

If we publish it, we'll send you $100 and a full set of *Woodsmith* back issues, with binders. Include a sketch (or photo) of your jig, explain how it's used, and include a daytime phone number.

SOURCES

Woodsmith Project Supplies offers hardware kits and supplies for some of the projects shown in this issue. Supplies for these projects are also available at your local hardware store or through the mail-order sources at right.

CHERRY BED

For being such a large project, the classic cherry bed on page 6 doesn't require much hardware. All you need are some woodscrews and a set of four 4"-long bed rail fasteners, currently available through *Woodsmith Project Supplies*.

7108-100 4" Bed Rail Fasteners.....$14.95

Note: These fasteners are also available at the sources listed at right.

CHILDREN'S BOOKCASE

Like the bed, there's not much hardware needed to build the children's bookcase featured on page 20. Besides a few screws, all you'll need are twelve L-shaped shelf supports and fourteen 3/8"-dia. plugs. (We used dome-topped plugs.)

These items are commonly available at local hardware stores or through the sources at right.

WOOD PENS

What's funny about this issue is that the two smallest projects, the pens and the clock (see below) require the most hardware.

For a list of the pen-making supplies you'll need to get started at turning pens, see the box on page 25. There are quite a few mail order sources that will be able to get you started turning pens, see the list at right.

TURNING JIG

To make the jig for turning the pens on the drill press (see page 26), there are just a few supplies you'll need.

Woodsmith Project Supplies is currently offering a hardware kit for this jig, including the following:

(1) 1/2"-dia. Steel Rod
(1) 1/4"-i.d. bearing
(1) 1/4"-dia. dowel center

7108-200 Drill Press Turning Jig $9.95

MANTEL CLOCK

To build the mantel clock that's shown on page 28, you'll need a common quartz movement with at least a 3/8"-long post and a 7 1/2"-square clock face (with a 5 1/2"-radius time ring).

Woodsmith Project Supplies is currently offering a kit for the clock including:

(1) Quartz Movement
(1) 7 1/2" x 7 1/2" Clock Face
(1 pr.) 2 3/4"-Long "Terry" Clock Hands
(4) Brass Turn Buttons with Screws
(1) 1/2"-dia. Studded Brass Knob
(4) 3/4"-dia. Felt Pads
(8) #6 x 1 1/4" Fh Woodscrews

Note: This kit does not include the glass or wood. (The wood is available in a separate kit, see below.)

7108-300 Mantel Clock Hardware Kit.....$21.95

The hardware listed above is also available at the sources listed at right.

ANILINE DYES. To stain the clock, we used Moser's water-based aniline dye called Golden Amber Maple. This particular dye is available from Woodworker's Supply, see listing at right. But aniline dyes are readily available from a number of sources.

WOOD KIT. Since it's not always easy to get good lumber these days, we have teamed up with Weyerhaeuser to offer the wood needed for building the mantel clock in maple, cherry, or walnut. *Note: This is regular non-figured wood.*

The wood here is Weyerhaeuser's ChoiceWood. It's milled S4S and is guaranteed to be completely defect free on all sides so there are no knots, splits, or cracks.

7108-325 Mantel Clock Wood (Maple).....$24.95
7108-350 Mantel Clock Wood (Cherry).....$52.95
7108-375 Mantel Clock Wood (Walnut).....$65.95

FIGURED MAPLE

If you can't find a source of figured maple in your area, you might want to try some of the mail order sources listed at right.

MAIL ORDER SOURCES

Similar project supplies and hardware may be ordered from the following companies:

Craftsman Wood Service
800-543-9367
Figured maple, Bookcase hardware

The Hardwood Store
800-849-9174
Figured maple, Pen-making supplies

Precision Movements
800-533-2024
Mantel clock hardware

Turncraft Clocks
800-544-1711
Mantel clock hardware

Woodcraft
800-225-1153
Figured maple, Pen-making supplies, Mantel clock hardware

Woodsmith Store
800-835-5084
Turning Jig, Bookcase & Mantel clock hardware, Pen-making supplies, Bed rail fasteners

Woodworkers' Store
800-279-4441
Bed rail fasteners, Aniline dyes, Bookcase hardware, Pen-making supplies

Woodworker's Supply
800-645-9292
Pen-making supplies, Moser aniline dyes, Bed rail fasteners

WOODSMITH PROJECT SUPPLIES

To order a hardware kit from *Woodsmith Project Supplies* or for a copy of our *WoodsmithShop* catalog, use our Toll Free order line. It's open Monday through Friday, from 7 AM to 7 PM Central Time.

Before calling, please have your VISA, MasterCard, or Discover Card ready.

If you would like to mail your order in, call the number below for more information concerning shipping charges as well as any applicable sales tax.

1-800-444-7527

Note: Prices subject to change after February 1997

WoodNet™ NOW ON THE WEB!

- 50 Woodworking Tips Online
- Woodworking Techniques — Step-by-Step
- Project Plans You Can Download
- WoodNet Forum — Woodworkers' Q & A
- Power Tool Reviews
- Links to Other Woodworking Sites
- Coming Soon: Online Back Issue Database

Point your browser to:

http://www.augusthome.com

Select "Woodworking" from the Welcome Page menu.

Final Details

Classic Cherry Bed. ► *You won't be chopping any mortises for the slats on this bed. That's because we used a hand-held router and a simple, shop-made jig. Plans for the bed begin on page 6. The technique article starts on page 14.*

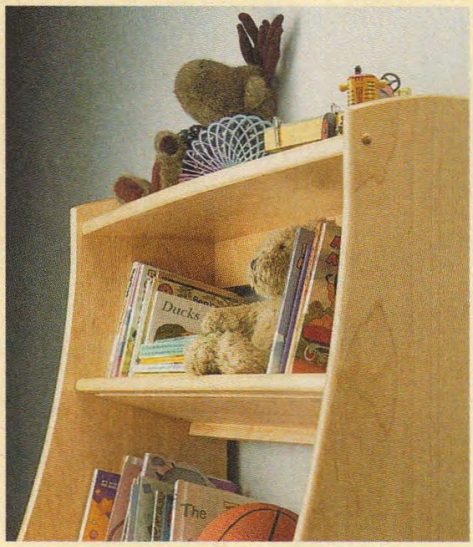

◄ **Children's Bookcase.** *The adjustable shelves on this maple bookcase tilt back to hold books. Or they'll lie flat for toys. Plans begin on page 20.*

▲ **Wood Pens.** *You can hardly go wrong with these turned pens — they don't take much time or materials. And you don't even need a lathe, see page 24.*

◄ **Mantel Clock.** *The first thing you notice on this clock is the striking curly maple. But what's really surprising is how easy it is to build. For complete instructions, see page 28.*